D7/398

11.23/ALd
1978 Sweets Catalog
(Architectural)

BEVERAGE DISPENSING SYSTEMS

BAR HOSE SYSTEMS
SODA SYSTEMS
LIQUOR SYSTEMS
PORTABLE BARS

BAR-O-MATIC

ALCO

BAR-O-MATIC
a division of **ALCO** FOODSERVICE EQUIPMENT CO.

D7/398

When you need...

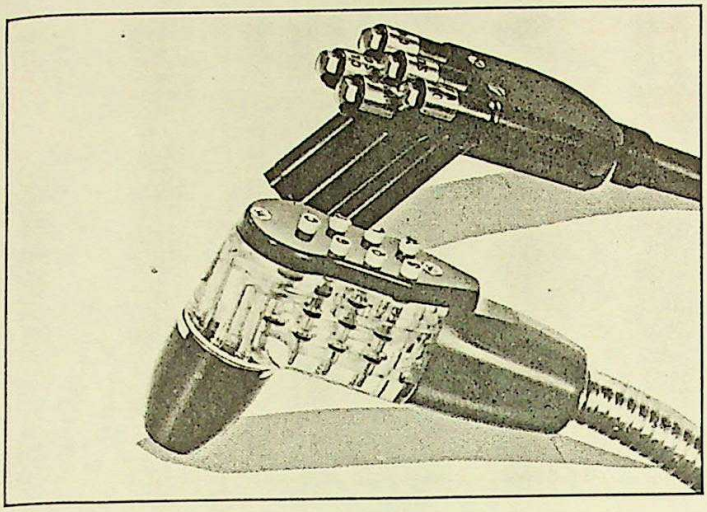

a bar valve

Pre-mix or post-mix. From 5 to 10 flavors. Whatever you need in a rugged, convenient hand-operated bar valve, Cornelius has it. All are easy to install, simple to maintain and can be used with a variety of cooling units.

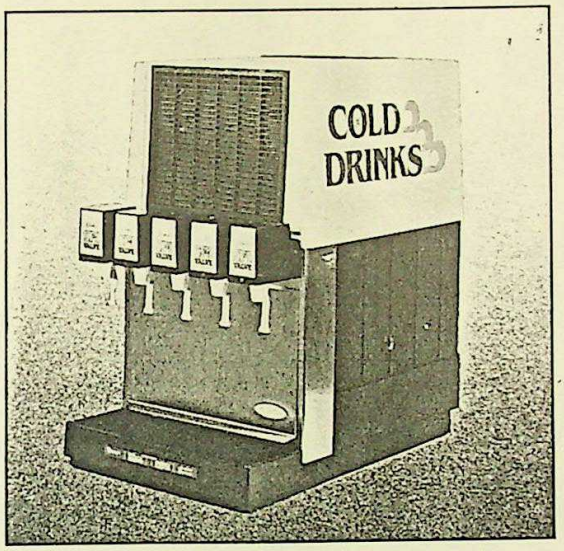

a countertop dispenser

The VENTURE takes less space and is lighter weight. Greater insulation and more cooling capacity than comparable overcounter units. Fewer parts and easier to service.

Available in post-mix with remarkable new SUPER-FLOW ONE (SF-1) valve. Also in pre-mix.

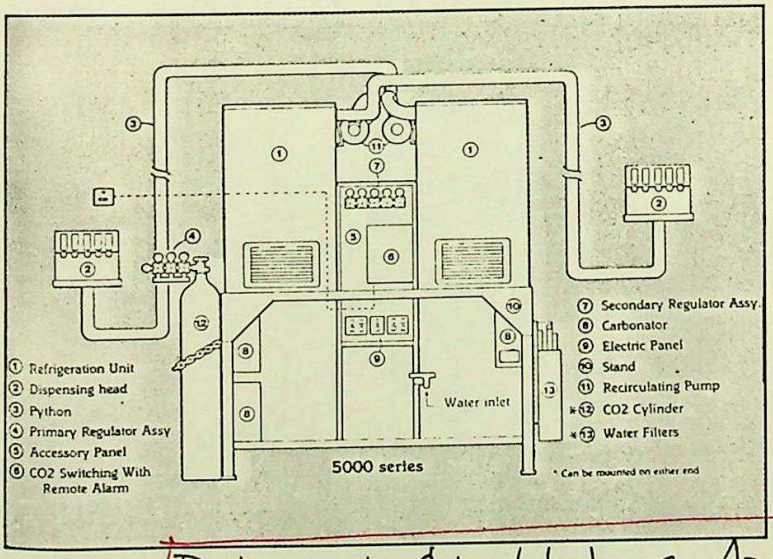

or a sophisticated cold drink system

Push the buttom to operate this high-traffic, high-volume and fast-flow Cornelius Series 5000 system. Complete from water filter to portion control dispensing.

Restaurants & Institutions, April 1, 1982, p. 92-S

you can count on Cornelius quality-built equipment.

Cornelius®

The Cornelius Company

One Cornelius Place, Highway 10 West, Anoka, MN 55303 □ 612/421-6120

For information circle 112

D7-398 AU 292 EX
PTU33 XR 4,505,191

United States Patent [19]
Longo

[11] **Patent Number: 4,505,191**
[45] **Date of Patent: Mar. 19, 1985**

[54] **DISPENSING UNIT FOR ESPRESSO COFFEE MACHINES**

[75] Inventor: **Walter G. Longo**, Desio, Italy

[73] Assignee: **Nuova Faema S.p.A.**, Milan, Italy

[21] Appl. No.: **598,163**

[22] Filed: **Apr. 9, 1984**

[30] **Foreign Application Priority Data**

Apr. 14, 1983 [IT] Italy 20587 A/83

[51] **Int. Cl.**[3] **A47J 31/24**
[52] **U.S. Cl.** **99/300**; 99/305
[58] **Field of Search** 99/279, 295, 300, 301, 99/305, 307, 299; 222/129.2; 426/433

[56] **References Cited**

U.S. PATENT DOCUMENTS

3,347,151	10/1967	Ronalds	99/295
4,253,385	3/1981	Illy	99/295
4,254,694	3/1981	Illy	99/295
4,429,623	2/1984	Illy	99/295

Primary Examiner—Robert W. Jenkins
Attorney, Agent, or Firm—Birch, Stewart, Kolasch & Birch

[57] **ABSTRACT**

A dispensing unit for espresso coffee machines produces an infusion by "cooking" and optimum exhaustion of the coffee powder. In this dispensing unit, the hot water supply duct to the filter holder is fitted with an air accumulator and is put into communication alternately with the hot water inlet and with the outlet of a three-way solenoid valve.

7 Claims, 1 Drawing Figure

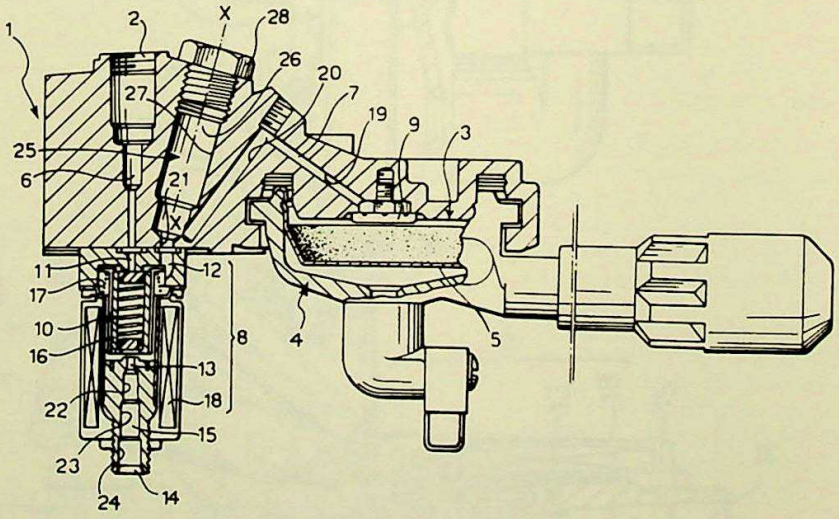

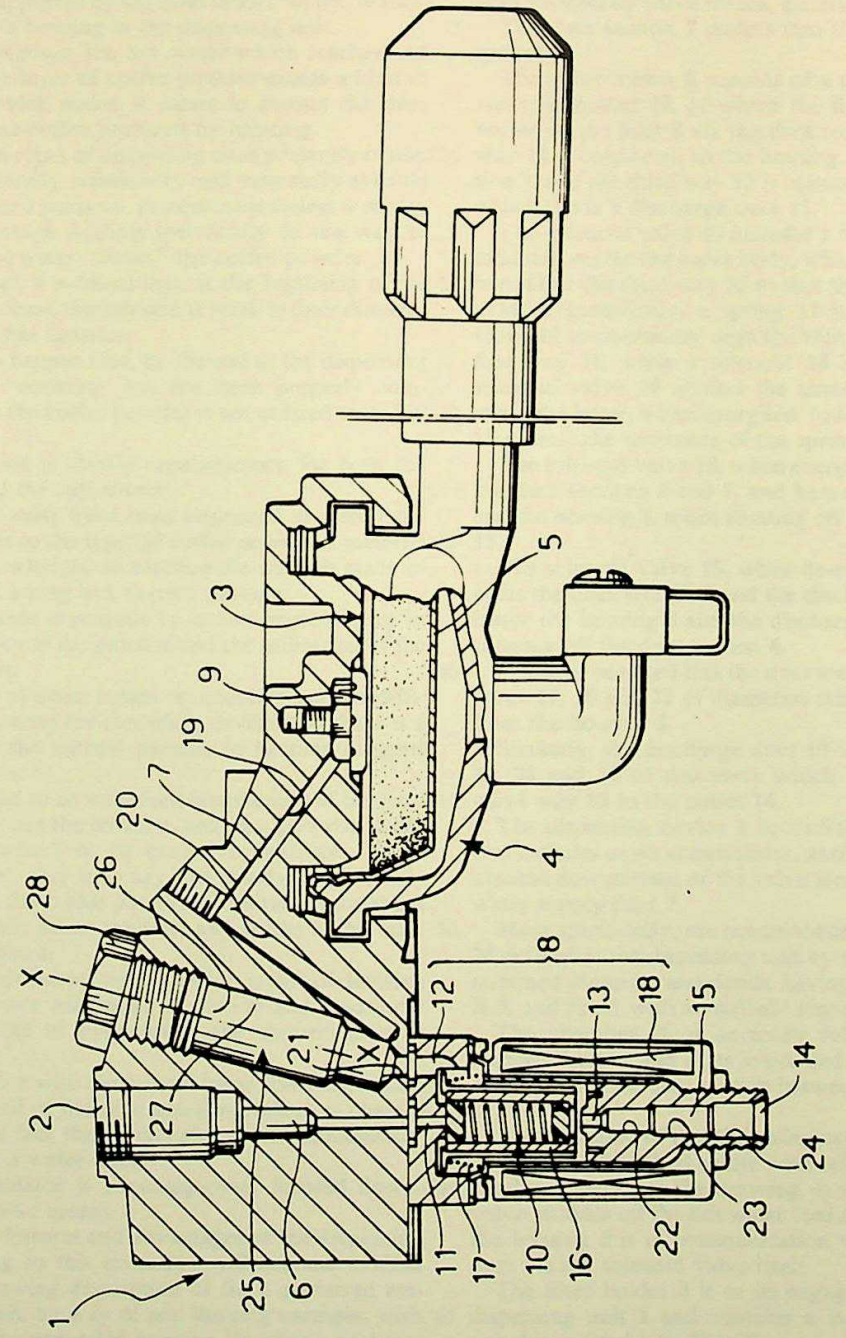
1
2
3
4
5
6
7
8
9
10
11
12
13
14
15
16
17
18
19
20
21
22
23
24
25
26
27
28
X
X

DISPENSING UNIT FOR ESPRESSO COFFEE MACHINES

The present invention concerns a dispensing unit for espresso coffee machines of the type comprising a duct extending between a hot water inlet and a housing in which a removable filter holder is inserted, and on-off hot water valve means located along the channel.

As is already known, espresso coffee is obtained from a dispensing unit by passing a certain metered quantity of water, previously brought up to a predetermined temperature, through a layer of coffee powder pressed into a filter supported by the filter holder which, in turn, is inserted in a housing in the dispensing unit.

As is also known, the hot water which reaches and permeates the layer of coffee powder causes a kind of "cooking" which makes it easier to extract the finer essences of the coffee prepared by roasting.

The known types of dispensing units presently in use, although generally satisfactory and essentially suitable for the intended purpose, present nonetheless a recognized diadvantage relating specifically to the way in which the hot water "cooks" the coffee powder.

In particular, it is found that, at the beginning of the dispensing process, the infusion is weak in finer essences and is somewhat tasteless.

It may also happen that, by the end of the dispensing process, the "cooking" has not been properly completed so that the coffee powder is not utilized to its full extent.

This situation is clearly unsatisfactory for both the consumer and the café owner.

Dispensing units have been suggested in which the hot water feed to the layer of coffee powder is metered by throttling, whereby in practice the water is made to flow through a long and narrow passage.

This has made it possible to obtain improvement in both the quality of the infusion and the utilization of the coffee powder.

The above system, however, entails a certain difficulty in calibrating the throttling device, and there is a tendency for the narrow passage to become clogged with sediments.

This can lead to an undesired lengthening of the time required to obtain the infusion, and may give rise to the opposite drawback of an excessive depletion of the coffee powder, that is to say, the disadvantage of extracting from the coffee powder undesirable substances which adversely affect the taste and aroma of the infusion thus obtained.

The object of the present invention is that of devising a dispensing unit presenting structural and functional features capable of overcoming the abovementioned drawbacks.

In accordance with the present invention a dispensing unit is provided of the type specified, which is characterised by the fact that it includes an air accumulator located along a water duct.

The accumulator is advantageously located downstream of a valve means.

Additional features and advantages of the dispensing unit according to this invention will become evident from the following description of the a preferred embodiment given, by way of non-limiting example, with reference to the appended drawing showing a part-sectional view of a dispensing unit according to the invention.

Referring to the drawing, there is generally indicated **1** a dispensing unit according to the invention, intended for an espresso coffee machine.

The dispensing unit **1** comprises a hot water inlet **2** for connection in an entirely conventional manner to the coffee machine boiler, and also a housing **3** into which is inserted, again conventionally, a removable filter holder **4**.

A filter **5** full of coffee powder is placed in the latter, facing the housing **3**.

The dispensing unit **1** also includes a hot water supply duct extending between the inlet **2** and the housing **3**, and formed of two consecutive duct sections **6** and **7** with interposed valve means, generally indicated **8**.

The duct section **7** outlets into the housing **3** via a spout **9**.

The valve means **8** consists of a three-way solenoid valve, indicated **10**, of which the first way **11** is connected to the inlet **2** via the duct section **6**, the second way **12** is connected to the housing **3** via the duct section **7**, and the third way **13** is connected to a discharge outlet **14** via a discharge duct **15**.

The solenoid valve **10** includes a shutter **16** movably mounted within the valve body, which engages the first way **11** or the third way **13** to shut them off alternately.

More specifically, a spring **17** is fitted within the valve **10** to constantly urge the shutter **16** towards the first way **11**, while a solenoid **18** is mounted on the solenoid valve **10** around the shutter **16** in order to move the latter, when energised, towards the third way **13** against the resistance of the spring **17**.

The solenoid valve **10**, when energised, interconnects the duct sections **6** and **7**, and hence the water inlet **2** and the housing **3**, while shutting off the discharge duct **15**.

The solenoid valve **10**, when de-energised, interconnects the duct section **7** and the discharge duct **15**, and hence the housing **3** and the discharge outlet **14**, while shutting off the duct section **6**.

It should be noted that the duct section **7** is formed by bores **19**, **20** and **21** of diameters which increase away from the housing **3**.

Similarly, the discharge duct **15** is formed by bores **22**, **23** and **24** of diameters which increase from the valve way **13** to the outlet **14**.

The dispensing device **1** according to the invention also includes an air accumulator, generally indicated **25**, situated downstream of the valve means **8** along the hot water supply duct **7**.

More specifically, the accumulator **25** has a chamber **26** defined in the dispensing unit by a bore **27** of predetermined diameter and depth, having a subvertical axis X-X and fitted with an airtight closure plug **28**.

The chamber **26** is normally full of air which is trapped therein, and at its lower end is in fluid communication with the duct section between the bores **20** and **21**.

The operation of the dispensing unit according to the invention is described below with reference to an initial condition shown in the drawing, in which the solenoid valve **10** shuts off the hot water feed ducts **6** and **7** while the housing **3** is in communication with the discharge duct via the solenoid valve itself.

The filter holder **3** is in its engaged position in the dispensing unit **1** and contains a layer of dry coffee powder pressed into filter **5**.

To obtain the required espresso coffee, it is sufficient to energise the solenoid valve **10** thereby connecting the

inlet **2** with housing **3** and at the same time shutting off the discharge duct **15**.

The hot water flows along duct sections **6** and **7** and is sprinkled from the spout **9** on to the layer of coffee powder, permeating through it and beginning to "cook" it.

As the water permeates the coffee powder, the latter expands to retain the water. A progressive increase in pressure is therefore created along the hot water feed duct.

This increase in pressure causes the gradual flooding of chamber **26**, with a reduction in the volume of the air pocket present in the chamber itself.

During this stage, there is no passage of water through the layer of coffee powder which is thus able to complete its "cooking".

Meanwhile, the water coming from the boiler builds up within chamber **26**.

After reaching the calibrated pressure, the water begins to filter through the layer of coffee powder, producing the optimum infusion with regard to both taste and aroma.

When the predetermined quantity of water has been dispensed, the valve is de-energised.

The duct section **6** is then shut off immediately and, at the same time, duct section **7** is connected to discharge duct **15**.

The latter allows venting of the water and steam left in chamber **26**, which is forced out by the air compressed therein, and of the water and steam in the ducts **7** and **15**, which is drawn in by the same air.

More specifically, the discharge of water and steam is aided by an effusion effect obtained by the progressively enlarged diameters of duct section **7** and discharge duct

At this point, it is sufficient to replace the exhausted coffee powder with fresh powder and re-energise the valve **10**, in order to bring the dispensing unit **1** back to its initial condition ready to produce another cup of coffee.

By virtue of the air accumulator **25**, a delay has been created in the dispensing of the infusion in relation to the supply of hot water to the dispensing unit; during this delay, the layer of coffee powder can thus be subjected to the desired length of "cooking".

Consequently, it is possible to obtain espresso coffee of uniform quality and enriched only with the finer essences of the coffee, achieving at the same time a complete exhaustion of the coffee powder used.

Ultimately, this results in full satisfaction for both the customer and the café owner.

Obviously, in order to meet specific individual requirements, an expert in the art may introduce many modifications and variations to the dispensing unit as described above, all of which fall within the scope of protection of the invention, as defined by the following claims.

I claim:

1. A dispensing unit for espresso coffee machines, of the type having a hot water inlet, a housing, a duct extending between the inlet and the housing, a removable filter holder inserted in the housing, and on-off hot water valve means located along said duct, wherein it duct.

2. A dispensing unit as defined in claim **1**, wherein the air accumulator is located downstream of said valve means.

3. A dispensing unit as defined in claim **2**, wherein the air accumulator is defined by a chamber in the dispensing unit, said chamber being normally full of air and being in fluid communication at its lower end with said duct downstream of said valve means.

4. A dispensing unit as defined in claim **1**, wherein said valve means consist of a three-way solenoid valve with a discharge duct, said valve having a first way connected to said hot water inlet, a second way connected to said housing, and a third way connected to discharge through said discharge duct, whereby said valve connects the housing alternatively so said hot water inlet and said discharge.

5. A dispensing unit as defined in claim **4**, wherein said valve comprises a shutter and a spring and an electromagnet which act on said shutter, whereby the latter alternatively shuts off the first and third ways by the action of said spring and said electro-magnet respectively.

6. A dispensing unit as defined in claim **4**, wherein said discharge duct has diameters which increase towards the discharge.

7. A dispensing unit as defined in claim **1**, wherein the section of the hot water supply duct between the housing and the valve means has a diameter which increases from said housing to said valve means.

* * * * *

07-398 AU 292 EX
PTH28 XR 4,605,225

United States Patent [19]
Zimmermann

[11] **Patent Number: 4,605,225**
[45] **Date of Patent: Aug. 12, 1986**

[54] **POURING SPOUT HAVING AN INSERT**

[75] Inventor: **Anso Zimmermann**, Bad Hersfeld, Fed. Rep. of Germany

[73] Assignee: **Rotpunkt Dr. Anso Zimmermann**, Niederaula, Fed. Rep. of Germany

[21] Appl. No.: **606,152**

[22] Filed: **May 2, 1984**

[30] **Foreign Application Priority Data**

May 10, 1983 [DE] Fed. Rep. of Germany 3317106

[51] **Int. Cl.**[4] **B65D 25/42**
[52] **U.S. Cl.** ..... **222/566**; 222/564; 239/591; 215/13 A
[58] **Field of Search** ..... 222/567, 569, 566, 540, 222/465 R, 465 A, 542, 519, 520, 131, 183, 479, 571, 572, 564, 575; 239/591, 592, 590, 590.3; 215/12 R, 12 A, 13 R, 13 A, 307, 309

[56] **References Cited**

U.S. PATENT DOCUMENTS

128,810	7/1872	Parker	222/465 R
628,652	7/1899	Dunlap	222/465 R
977,932	12/1910	Cole	222/567
1,992,490	2/1935	Lewis	239/591 X
2,160,602	5/1939	Nagel	222/567
2,266,570	12/1941	Searls	222/465 R
2,535,837	12/1950	Coyle	222/566
2,793,021	5/1957	Courtney	222/569
3,831,857	8/1974	Scott	222/567
3,844,450	10/1974	Johnson	222/183
3,926,348	12/1975	Lutzker	222/567 X
4,230,238	10/1980	Wilson	222/571 X

FOREIGN PATENT DOCUMENTS

216358	of 1908	Fed. Rep. of Germany	222/567
1297305	12/1969	Fed. Rep. of Germany	222/567
3316941	11/1984	Fed. Rep. of Germany	215/13 A
896600	2/1945	France	239/591
1335611	7/1963	France	222/183
1181289	8/1968	United Kingdom	222/183

Primary Examiner—Joseph J. Rolla
Assistant Examiner—Kevin P. Shaver
Attorney, Agent, or Firm—Lewis H. Eslinger

[57] **ABSTRACT**

A container (**3**) having a pouring section (**1**) is outlined, the pouring channel (**6**) of which makes optimum pouring action possible. The pouring section (**1**) consists of a portion (**8**), which is formed on the container (**3**), having a section (**10**) of the pouring channel (**6**) facing the interior space (**9**) and a widened part (**11**), which borders thereon. An internal portion (**12**) having the other section (**13**) of the pouring channel (**6**), which portion may be inserted into the widened part (**11**) preferably in a liquid-tight manner. The internal portion (**12**) can be glued, welded or snapped into the widened part (**11**).

12 Claims, 8 Drawing Figures

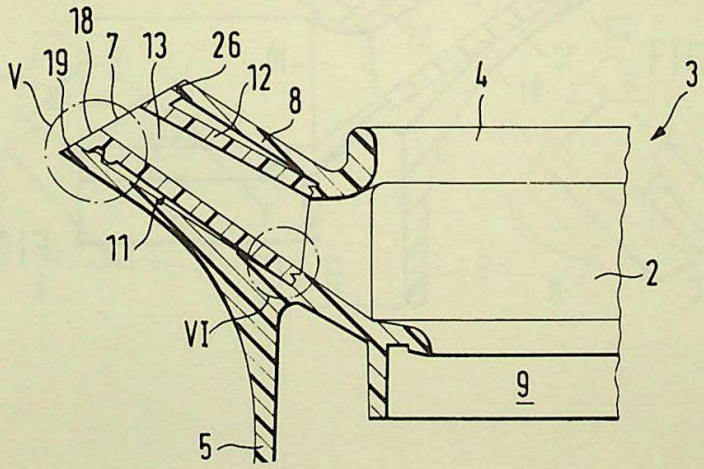

FIG.1

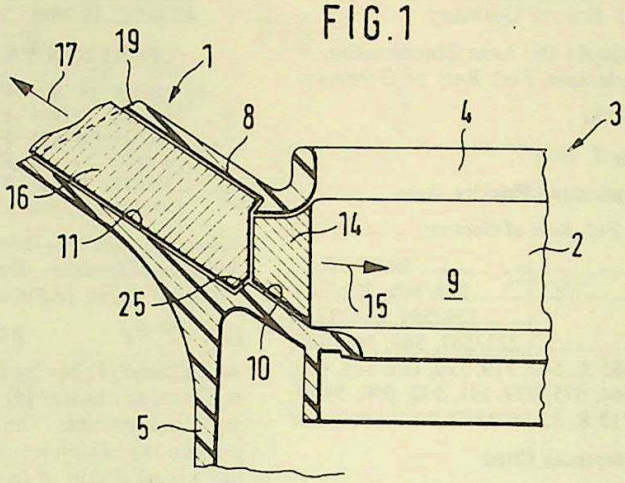

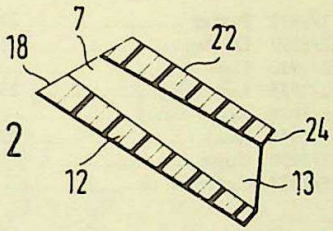

FIG.2

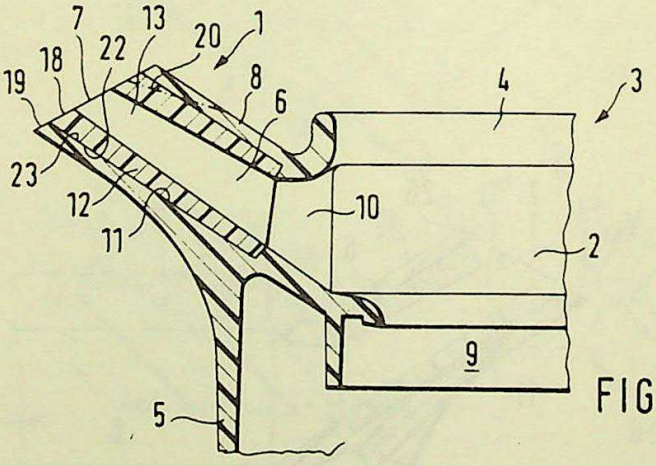

FIG.3

FIG. 4

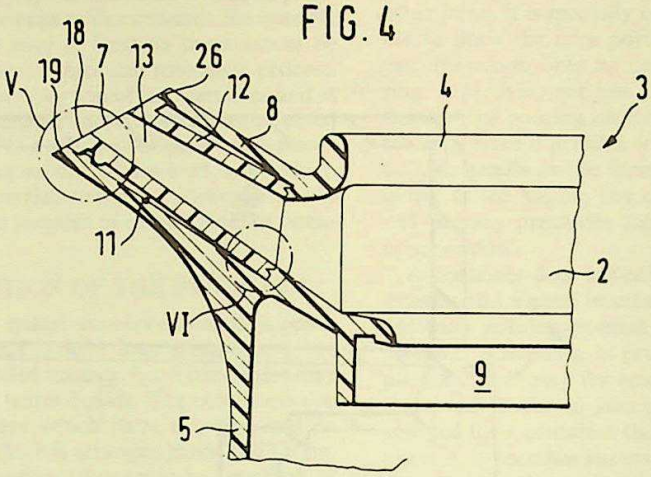

FIG. 5

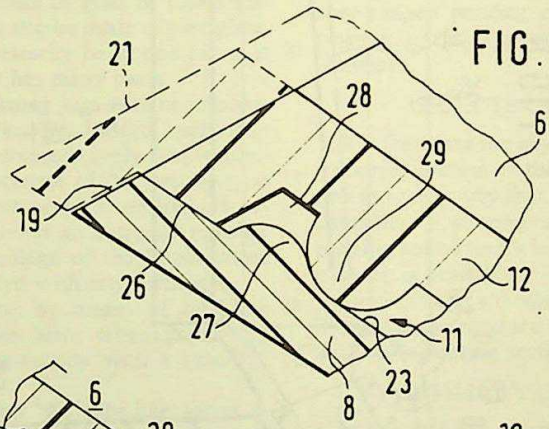

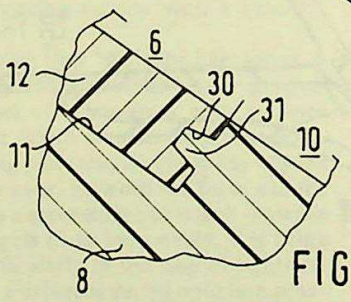

FIG. 6

FIG. 7

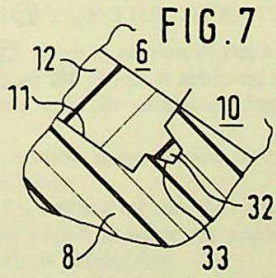

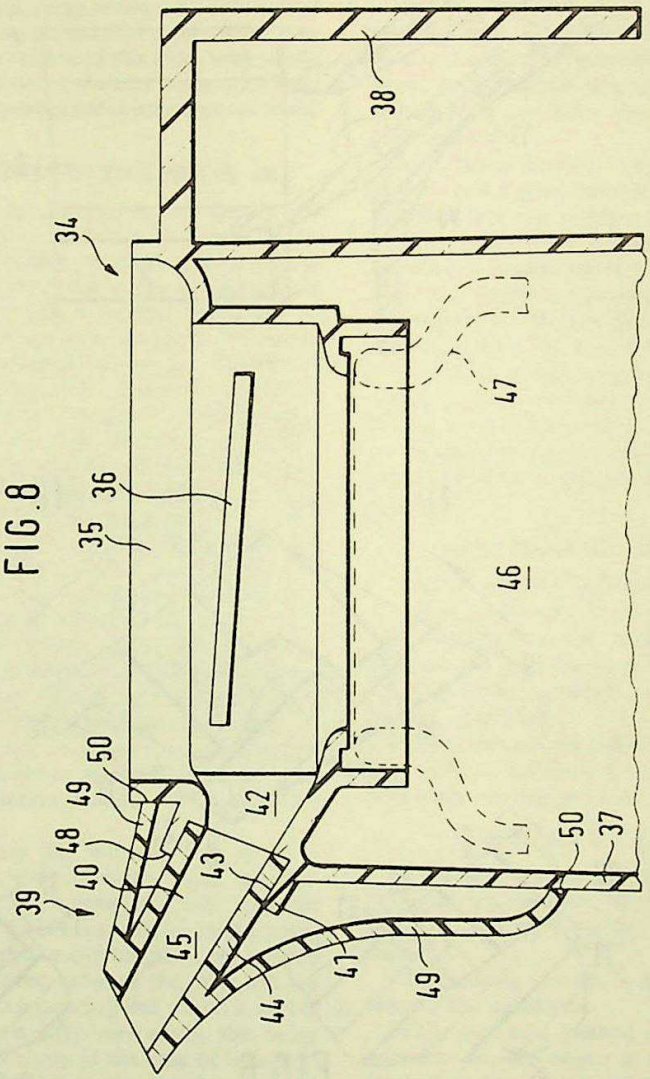

FIG. 8

POURING SPOUT HAVING AN INSERT

TECHNICAL FIELD OF THE INVENTION

The invention relates to a multipart pouring section which forms a tube-like spout with a cone-shaped pouring channel which does not widen towards the outside, for containers which may at least to some extent be produced according to an injection moulding process, and in which at least one portion of the container and at least one portion of the pouring section are constructed in one piece; and also to a method for producing a container having a pouring section of this kind, with which method moulding is carried out about cores which are then drawn out for the purpose of release from or opening of the mould.

BRIEF DESCRIPTION OF THE PRIOR ART

Pouring sections of containers serve to make it possible for a liquid, which is held in a container, to be poured out in a controlled manner. Such containers may serve to store cold or warm liquids. The containers can be insulating containers which have a casing and an insulating container which is arranged inside the casing. In the case of such containers it can also be a question of an insert which is provided with a form of heat insulation. The container is usually made of synthetic material; the insert can also be made of glass or plexiglass. The container as a whole can also be made of plexiglass. The container need not necessarily be in one piece; it can be constructed so that it has many parts.

Drink containers and insulating jugs with open pouring spouts are, for example, known. Indeed, such open spouts can be produced in a comparatively simple manner, in which the shape or course of the groove-type pouring channel can be constructed as desired. However, it is not possible to achieve an optimum pouring action, more particularly spillage of the liquid when pouring out cannot be avoided with any certainty.

This problem is overcome by means of tube-like spouts. However, difficulties arise when producing containers having a pouring section with a tube-like spout.

In a known insulating jug the tube-like spout is achieved by covering the upwardly open groove-shaped pouring channel of a container with an open spout by a sealing plate which is mounted on the pouring section. This sealing plate can be glued on, welded on or snapped on. However, between the plate and the pouring section there is a separating line which is visible externally and which gets dirty very easily, this being unfavorable, more particularly in the case of light-colored pouring sections. Furthermore, an optimum pouring channel which extends tubularly or which is tapered outwards in a cone-shaped manner having an opening with a small cross section at the end farthest from the container and an opening with a large cross section at the other end in communication with a neck portion of the container, cannot be produced with this method, as for this purpose wall thicknesses which are too large are required, something with which injection moulding techniques cannot cope.

Attempts have already been made to produce a pouring section with a tube-like spout and optimally formed pouring channel. In the case of production using injection moulding techniques, moulding is carried out about a core portion which, after moulding, for the purpose of removal from the mould must be drawn out in the direction of the interior space of the container. This is, however, only possible, in terms of manufacturing techniques, if the core portion can actually be drawn out to the interior space. This, in turn is only possible if, on the one hand, the upper portion of the container comprising the pouring section is produced separately and if, on the other hand, it is specially constructed so that it is possible to draw the core portion out. This upper portion can, therefore, only be constructed as a very narrow ring. Moreover, not just any, but only certain inclinations of the pouring channel in respect of the plane of the ring make it possible to draw the core out. In addition, no handle can be formed on this upper portion any more, as the handle lies opposite the pouring section and thereby precludes the action of drawing out the core portion.

A container does not only have to have an attractive exterior and a good internal design, but must also make optimum pouring possible during use, and it must be possible, in addition, to produce the container in a simple manner if only for reasons of cost. If pouring sections with optimum pouring action are, therefore, developed for a container then, when realizing this development, it becomes necessary to effect a change in the shape which change is not to the benefit of the pouring action, in order to make production possible. In practice, this means that there must be a departure from the cone-shaped pouring channel which effects optimum pouring, or that a special design must be chosen for the container.

OBJECTS OF THE INVENTION

It is therefore the object of the invention to construct a pouring section of the kind specified in the introduction in such a way that, irrespective of the shape of the container, a pouring section which has an optimum pouring action and which may be produced in a simple manner, is available.

Furthermore, a method is to be outlined which makes it possible to produce containers which are provided with such pouring sections in a simple manner.

SUMMARY OF THE INVENTION

In the case of a pouring section of the kind specified in the introduction, the object is achieved according to the invention through the characterizing features of claim **1**.

This pouring section is developed through the features of the subclaims.

In the case of a method of the kind specified in the introduction, the object is achieved according to the method as described hereinafter.

The invention is therefore based on the consideration that technically in a comparatively simple manner it is possible, upon removal from the mould, to draw-out a (short) core portion inwards and to draw-out another core portion outwards and that, furthermore, technically it is possible to make a separate portion which, on the one hand, comprises one portion of the pouring channel and which, on the other hand, may be inserted into the space formed by the core which has been drawn-out outwards.

In this way, limitations in respect of the shape of the pouring section and of the container from the point of view of being able to remove the pouring channel from the mould no longer exist. Thus, on the one hand, the container can be designed and made in accordance with

the desired attractive shape and, furthermore, the pouring section can be adapted on its exterior to this shape and, in addition, can have an optimally formed pouring channel. There are no restrictions with regard to the shaping of the exterior of the pouring section; joints, which can get dirty, no longer exist. It is to be noted thereby that the production is extremely favorable in terms of cost. Furthermore, it is advantageous that if during use it emerges that the pouring channel is not yet optimum, the desired pouring action can be achieved by modifying the internal portion and this means that merely the shape for the small internal portion has to be modified, yet the shape for the rest of the container, which in contrast is very large, can remain unchanged, this obviously being favorable in terms of cost for the production of the moulds necessary for the manufacture. In addition, it is to be noted that in the event of damage, the internal portion can be exchanged for another in a simple manner. Finally, if the internal portion is produced from a different material and/or a material which is of a different color, special effects, more particularly with regards to design, can be achieved. Pouring sections which have an ideal pouring action, which are not dependent upon the outer shape of the pouring section and of the container and which, in addition, may be produced in a simple and cost-effective manner, may thus be obtained. Furthermore, even a drip-preventing edge can be produced on the internal portion with an ideal cross section irrespective of the shape of the pouring section by means of a small, simple mould. Furthermore, with suitable construction the same internal portion can be used for differently shaped pouring sections or containers.

In a special method of production, the container or that portion of the container on which the portion of the pouring section leading to the interior space is formed can be produced by introducing the previously produced internal portion which has been removed from its mould, into the mould for the container or container portion and by injection-moulding the container or the container portion about this internal portion using the container or container portion core portion which is to be removed towards the interior from the mould. It must be noted thereby that the methods of production, which are most favorable in terms of cost, may be used quite generally, more particularly plastic injection-moulding processes may be used.

BRIEF DESCRIPTION OF THE DRAWINGS

The invention is explained in greater detail with the aid of the exemplary embodiments represented in the drawing, in which:

FIG. 1 diagrammatically shows in section view that portion of the pouring section which is formed on the container and also the cores for moulding this portion of the pouring section;

FIG. 2 shows in section view the internal portion of the pouring section;

FIG. 3 shows in section view the internal portion which has been inserted into the widened part of that portion of the pouring section which is formed on the container;

FIG. 4 shows in section view another embodiment of that portion of the pouring section which is formed on the container and also of the internal portion;

FIG. 5 shows in section view the item V in FIG. 4 on an enlarged scale;

FIG. 6 shows in section view the item VI in FIG. 4 on an enlarged scale;

FIG. 7 shows another embodiment of the embodiment represented in FIG. 6; and

FIG. 8 shows in section view another embodiment of that portion of the pouring section which is formed on the container portion and of that internal portion of the pouring section which is inserted into the widened part of the pouring section.

DETAILED DESCRIPTION OF THE PREFERRED EMBODIMENT OF THE INVENTION

FIGS. 1 to 3 show in section view the neck portion 2 of a container 3 which is made of synthetic material, the neck portion 2 having a pouring section 1. A plug (not represented) may be inserted, more particularly screwed, into the neck portion 2 of the container 3. In the case of the exemplary embodiment represented, the container 3 is constructed so that it can receive an insulating vessel (cf. FIG. 8). The container can, however, also be constructed so that it can receive liquid directly or can be formed or mounted on a vessel (not represented) for receiving liquids. The neck portion 2 of the container 3 has a neck opening 4 and also a casing 5 of which merely one portion is represented.

The pouring section 1 has a pouring channel 6 which is essentially cone-shaped and which widens towards the end in communication with the neck portion. The cross-section of the pouring channel 6 can be circular, ellipse-shaped or polygonal (with rounded-off edges). The pouring channel 6 is constructed in the case of the exemplary embodiment represented so that it tapers towards the outside.

It is essential that the pouring section 1 is constructed as a tube-like spout, that the pouring channel 6 is thus surrounded as far as the pouring opening 7.

When producing containers having pouring sections of this kind, difficulties arise in practice when removing from the mould. In other words, the core cannot be drawn out into the interior of the container as is necessary, more particularly in the case of pouring channel 6 which tapers towards the outside. This problem is overcome by constructing the pouring section 1 according to the invention.

The pouring section 1 consists of a portion 8 of the pouring section formed on the container 3 or on that portion of the container 3 which has the pouring section, a section of which portion 8 which faces the interior space 9 of the container 3 forming a section 10 of the cone-shaped pouring channel 6. Following that, the portion 8 which is formed on the container 3, has a widened part 11 which opens to the outside and which is cylinder-shaped or of widening cone-shaped form. An internal portion 12 of the pouring section 1 which comprises the remaining section 13 of the pouring channel 6 is inserted into the widened part 11 from the outside. The section 13 and the section 10 of the pouring channel 6 merge so that they are flush, when the internal portion 12 is inserted into the widened part 11, in such a way that a pouring channel 6 with optimum pouring action is formed.

That portion 8 of the pouring section 1 which is formed on the container 3 having the widened part 11 can be produced in a simple manner as no problems arise when releasing from the mould. As represented in FIG. 1, the core portion 14 which forms that section 10 of the pouring channel 6 which leads to the interior

space can be drawn-out to the interior space **9** of the container **3**, according to arrow **15**, when releasing from the mould. The core portion **16** forming the widened part **11** can, on the other hand, be drawn-out towards the outside, according to arrow **17**, upon removal from the mould. This is very simple, more particularly, when the widened part enlarges towards the outside in a cone-shaped manner.

The internal portion **12** of the pouring section **1** can be produced in a simple manner, as is easily seen from FIG. **2**, and no special explanation is required.

In the embodiment of the pouring section represented in FIG. **3**, that portion **8** of the pouring section **1** which is formed on the container **3** essentially completely surrounds the internal portion **12** of the pouring section **1**, and the external front side **18**, of the internal portion **12**, and the external front side **19** of the portion **8** which is formed on the container **3** terminate so that they are flush. Special visual effects can be achieved hereby when the internal portion **12** is constructed in a different color compared with the container **3**. Furthermore, through suitable construction of the front sides **18** and **19** a drip-removing edge, which is advantageous for the pouring action, can be formed.

As represented in FIG. **3** by a dash-and-dot line **20**, the portion **8** which is formed on the container **3** need not necessarily completely surround the whole internal portion **12**, whereby other visual effects can again be achieved when the internal portion **12** is constructed in a different color compared with the container **3**.

According to another embodiment, as is represented in dotted lines in FIG. **5**, the end section of the internal portion **12**, which section points towards the outside, can jut out over the front side **19** of the portion **8**, which is formed on the container **3** in such a way that only the front side **21** of this internal portion **12** points to the outside.

An embodiment of the internal portion **12** is shown in FIGS. **2** and **3**, the outer wall **22** of the internal portion **12** terminating when insertion has taken place so that it is flush with the internal wall **23** of the widened part **11**. Furthermore, the front side **24** of the internal portion **12** which side-points to the interior space, rests so that it is flush against a corresponding stepped wall **25** of the widened part **11**. The internal portion **12** is advantageously inserted into the widened part **11** in a liquid-tight manner. This can be achieved through corresponding dimensioning of the internal portion **12** in respect of the widened part **11** in such a way that a press fit is possible. The internal portion **12** is advantageously glued or welded into the widened part **11**.

As represented in FIG. **4**, the internal portion **12** can also have essentially uniform wall thickness and can be held in the widened part **11**, for example, can be welded or glued, in the widened part **11** solely in the region of the stepped wall **25** through the front side **24** and in the region of the pouring opening **7** through an outer wall section **26** at the front side **18**. For the purposes of structural reinforcement, longitudinal and/or transverse ribs can be provided on the exterior (not represented).

The internal portion **12** can also be securely received in the widened part **11** by way of a locking connection, as represented by way of example in FIG. **5**. The locking connection represented in FIG. **5** has, on the internal wall **23** of the widened part **11**, projecting raised stop portions **27** and also a corresponding depression **28** in the outer wall **22** of the internal portion **12** or corresponding projections **29**. In the state where the internal portion has been inserted into the widened part **11**, the raised stop portions **27** engage into the depression **28** or behind the projection **29**.

Furthermore, in order to guarantee that the internal portion **12** is received in the widened part **11** in a liquid-tight manner, it is advantageous if a sealing interlocking connection is also achieved between the front side **24** and the stepped wall **25**. This can be achieved by means of sealing lips between both surfaces **24**, **25**. However, it is advantageous to provide in this region a tooth construction, in the case of which the front side **24** has, according to FIG. **6**, a recess **30** which can also be circular, while the stepped wall **25** has one or more corresponding projections **31**. On the other hand, as represented in FIG. **7**, the front side **24** can have the projections **32** and the stepped wall **25** can have the recess **33**. Finally, both constructions can alternate with each other over the peripheral course of the front side **24** and of the stepped wall **25** in such a way that an interlocked and liquid-tight engagement is achieved.

FIG. **8** shows the application of the invention in the case of an insulating jug constructed in a special way. The container **34** has a neck portion **35** having thread sections **36** for the purpose of screwing in a plug. The casing **37** of the container **34** extends over at least one substantial vertical section of the container **34**. At the upper end of the container **34**, that is, in the region of the neck portion **35**, a handle **38** is formed on one side and on the opposite side a pouring section **39**, which is constructed according to the invention, is provided. That means that the pouring section **39** forms a tube-like spout and has a cone-shaped pouring channel **40** which does not widen, at least towards the outside. Also here the pouring section consists of a portion **41**, which is formed on the container **34**, having a section **42** of the pouring channel and a widened part **43** and also an internal portion **44** having the other section **45** of the pouring channel, the internal portion **44** being inserted into the widened part **43**. Furthermore, as represented in dotted lines, an insulating container **47** is inserted into the interior space **46** of the container **34**.

In the case of this embodiment, the internal portion **44** projects a relatively long way over the front side **48** of the portion **41** which is formed on the container **34** and bears on the exterior a screen **49** which can cover the whole pouring area and the front side **50** of which comes to be installed on the outer wall of the casing **37** and of the neck portion **35**. The installation can, as diagrammatically indicated in the region of the casing **37**, take place in a springy manner. It appears that in this way, when the container **34** is a standardized basic model, different shapes of the pouring region can be achieved merely by means of a different form of construction of the internal portion **44** with screen **49**.

It appears, furthermore, that the internal portion of the pouring section cannot only be produced from a material which is of a different color, but also from a different material that is, not only from synthetic material, but also, for example, from metal, porcelain or ceramics, so that there is not only a variety of shapes but also a possibility of choice of the material which will be optimum in each case.

Even the container or its portion carrying the pouring section need not only be made of synthetic material, but can also be made of metal, ceramics or the like that is, from every material which may be processed according to an injection moulding process.

Furthermore, this construction has, in addition, the special advantage that in the event of damage to the pouring section, which generally merely affects the latter's internal portion, this internal portion can be exchanged very easily for a new internal portion.

In this way, containers having a pouring section, which has optimum pouring action with full scope in terms of shape, can be made. Simple removal from the mould is thereby possible when producing the container so that cost-effective production can be achieved.

This holds true more particularly for the case where the casing **5** or **37** of the container **3** or **34** extends over a substantial vertical section in such a way that a core for the formation of the pouring channel cannot be drawn out downwards.

The method of producing such containers consists, with regard to the pouring section, in drawing the core portion **14** which forms the section **10** of the pouring channel **6** and which section faces the interior space **9** of the container **3**, into the interior space **9** (arrow **15**) while the core portion **16** which forms the widened part **11** is drawn off towards the outside (arrow **17**), and in then inserting the internal portion **12** into the widened part **11** from the outside.

According to an advantageous development, an internal portion **12** which has been produced and released from its mould, can thereby be used instead of the core portion **16** and this can be injection-moulded around when producing the container **3**, a firm and liquid-tight connection being thereby guaranteed between the internal portion **12** and that portion **8** of the pouring section **1** which is formed on the container **3**.

Through the invention, containers, which have a pouring section, which is constructed as a closed spout, which has no external joints and which can be produced in a simple manner irrespective of the construction of the casing and of the pouring section itself, can thus be made such that the pouring channel can be designed with regard to optimum pouring action.

What is claimed is:

1. A pouring section for use with a container for liquids, said container having an open neck portion of injection-molded material on its upper end, said pouring section cooperating with said container and forming a tube-like spout through which liquid contents of said container can be poured, said tube-like spout comprising:

a moldable member laterally projecting out of said neck portion of said container and having an open conduit communicating with said neck portion of said container, said molded member having

a first portion communicating with said neck portion of said container and having a cylindrically shaped bore diverging toward the interior of said container, and

a second portion communicating with said first portion and having a bore of substantially uniform cross sectional area and facing outward from said container; and

a molded insert having an outside diameter and shape corresponding to said bore in said second portion of said molded member for insertion thereinto and having a channel therein for passage of liquid, said channel being conically shaped and diverging toward an outer wall of said container, such that wide end of said conically shaped channel fits flush up against said cylindrically shaped bore in said first portion of said molded member.

2. A pouring section for use with a container for liquids, said container having an open neck portion of injection-moldable material on its upper end, said pouring section cooperating with said container and forming a tube-like spout through which liquid contents of said container can be poured, said tube-like spout comprising:

a molded member laterally projecting out of said neck portion of said container and having an open conduit communicating with said neck portion of said container, said molded member having:

a first portion communicating with said neck portion of said container and having a conically shaped bore diverging toward the interior of said container, and

a second portion communicating with said first portion and having a bore of substantially uniform cross sectional area and facing outward from said container; and

a molded insert having an outside diameter and shape corresponding to said bore in said second portion of said molded member for insertion thereinto and having a channel therein for passage of liquid, said channel being conically shaped and diverging toward an outer wall of said container, such that a wide end of said conically shaped channel fits flush up against an opening at a tapered end of said conically shaped bore in said first portion of said molded member.

3. The apparatus according to claim **2**, further comprised by said first portion of said molded member adjacent to said open neck portion of said container essentially completely surrounding said molded insert.

4. The apparatus according to claim **2**, further comprised by said insert communicating with said second portion of said molded member is in a liquid-tight manner.

5. The apparatus according to claim **2**, further comprised by said insert having sealing lips which engage with said second portion of said molded member in a liquid-tight manner.

6. The apparatus according to claim **2**, further comprised by said insert being removably attached to said second portion of said molded member.

7. The apparatus according to claim **2** further comprised by said molded member being fabricated of a first injection-moldable material and said insert being fabricated of a second injection-moldable material.

8. The apparatus according to claim **2**, further comprised by said insert and said second portion of said molded member has a series of corresponding alternating projections and recesses which interlock in a liquid-tight manner when said insert and said second portion of said moldable member are joined.

9. The apparatus according to claim **8** wherein said projections and recesses of said insert and said second portion enable the insert to be removably attached by a snap fit.

10. The apparatus according to claim **2**, further comprised by said insert being fixedly attached to said second portion of said molded member.

11. The apparatus according to claim **10** wherein the insert is fixedly attached by gluing.

12. The apparatus according to claim **10** wherein the insert is fixedly attached by welding.

* * * * *

D7-398

GB 2177185
JAN 1987

UNITED KINGDOM

(12) UK Patent Application (19) GB (11) 2 177 185 A

(43) Application published 14 Jan 1987

(21) Application No 8616271

(22) Date of filing 3 Jul 1986

(30) Priority data
(31) 8516908 (32) 4 Jul 1985 (33) GB

(71) Applicant
Alumasc Limited

(Incorporated in United Kingdom)

Burton Latimer, Kettering, Northamptonshire NN15 5JP

(72) Inventor
Roger John Hyde

(74) Agent and/or Address for Service
Phillips & Leigh,
7 Staple Inn, Holborn, London WC1V 7QF

(51) INT CL[4]
B67D 3/00

(52) Domestic classification (Edition I):
F2V P181 R2
U1S 1111 F2V

(56) Documents cited
GB A 2108638 GB 0656296 EP A2 0111812
GB 1573502 GB 0561385 WO 83/04082

(58) Field of search
F2V
Selected US specifications from IPC sub-classes F16K B67D

(54) Liquid dispensing tap

(57) A tap for dispensing liquid, such as beer, from a container, comprises a tubular spigot (2) to fit a container outlet, a valve chamber (4) for a piston valve (8) which closes a transfer port (3) and has a plug (12) which seals in and controls flow from a dispensing nozzle (7). A flexible vane (19), formed integrally with the the plug (12) by means of grooves (18), seals against the interior surface of the nozzle (7).

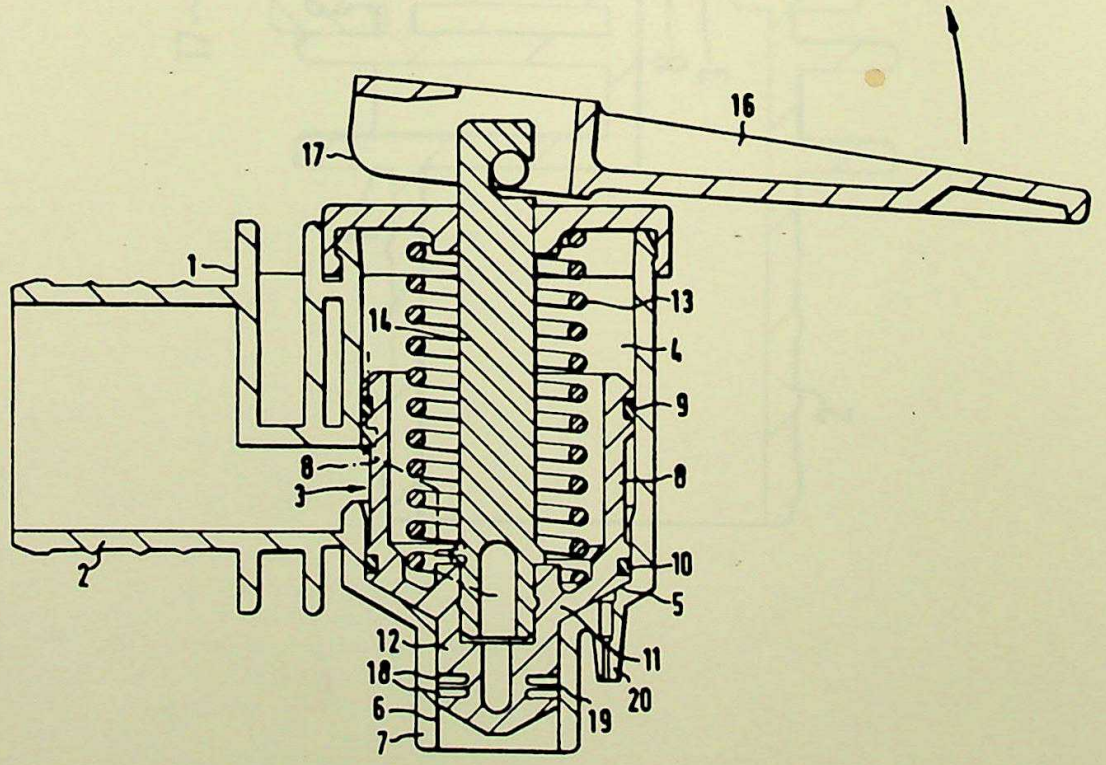

from 222/509 XR

GB 2 177 185 A

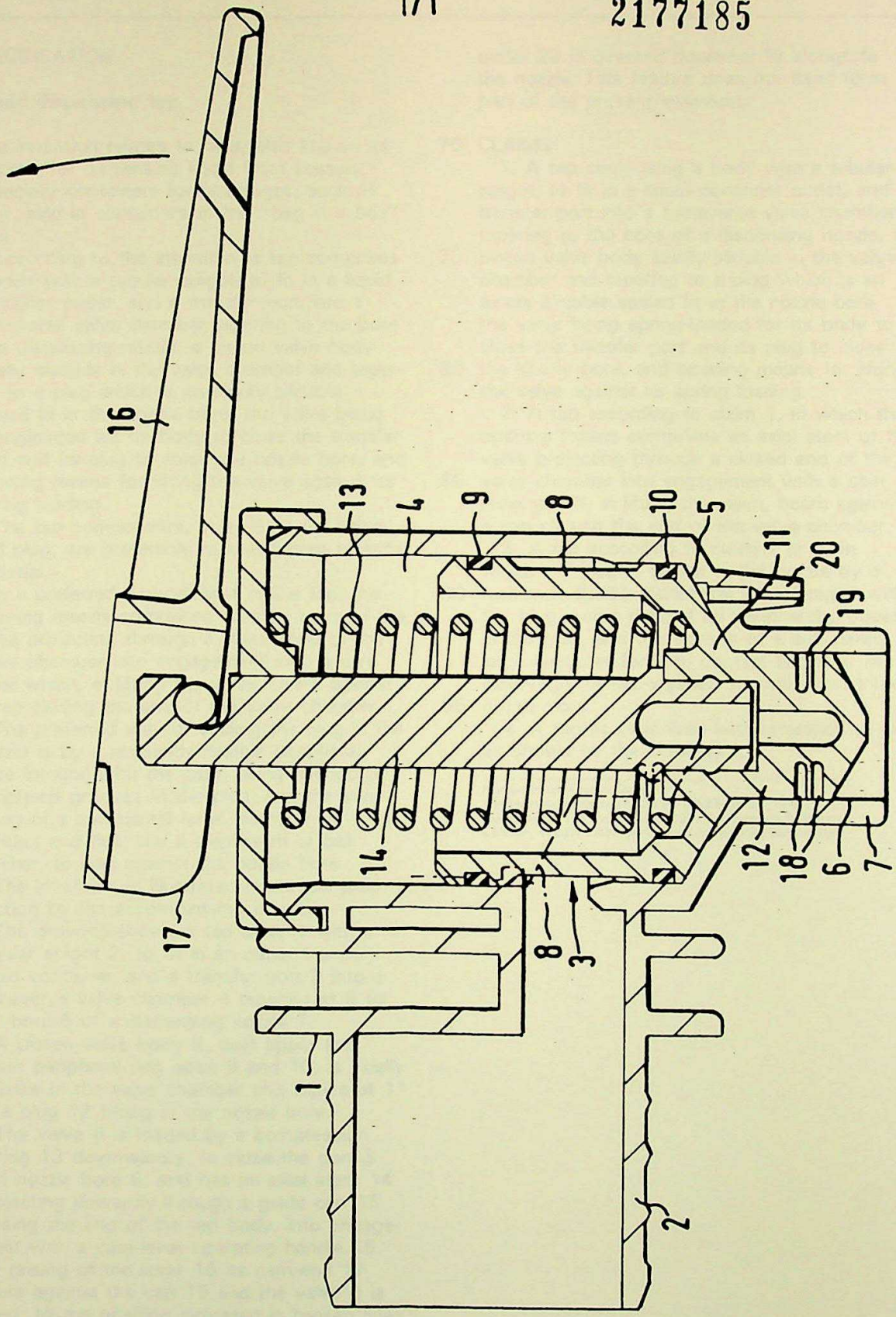
16
13
4
9
8
10
5
11
20
19
14
12
18
6
7
17
8
3
1
2

SPECIFICATION

Liquid dispensing tap

This invention relates to taps, also known as faucets, for dispensing liquid from vessels, especially containers for beverages, such as beer, held in containers of the "bag in a box" type.

According to the invention, a tap comprises a body with a tubular spigot, to fit in a liquid container outlet, and a transfer port into a transverse valve chamber tapering to the bore of a dispensing nozzle, a piston valve body axially slidable in the valve chamber and tapering to a plug which is an axially slidable sealed fit in the nozzle bore, the valve being springloaded for its body to close the transfer port and its plug to close the nozzle bore, and opening means for lifting the valve against its spring loading.

The tap components, or at least the valve and plug, are preferably moulded from plastics material.

In a preferred embodiment of the tap, the opening means comprises an axial stem of the valve projecting through a closed end of the valve chamber into engagement with a cam lever which, in lifting the valve, bears against a cap closing the end of the valve chamber.

The preferred way of sealing the plug in the nozzle is by a resiliently flexible peripheral vane integral with the plug, being defined by peripheral grooves in the plug, and the vane being of a sufficiently large diameter for it to contact and flex, like a diaphragm or bell washer, to seal against the nozzle bore.

The invention is illustrated in vertical axial section by the accompanying drawing.

The drawing shows a tap body 1 with a tubular spigot 2, to fit in an outlet from a liquid container, and a transfer port 3 into a transverse valve chamber 4 tapering at 5 to the bore 6 of a dispensing nozzle 7.

A piston valve body 8, with upper and lower peripheral ring seals 9 and 10, is axially slidable in the valve chamber and tapers at 11 to a plug 12 fitting in the nozzle bore.

The valve 8 is loaded by a compression spring 13 downwardly, to close the port 3 and nozzle bore 6, and has an axial stem 14 projecting upwardly,through a guide cap 15 closing the end of the tap body, into engagement with a cam-lever operating handle 16. On raising of the lever 16 its cam-end 17 bears against the cap 15 and the valve 8 is lifted, to the position indicated in broken lines, to open the transfer port and nozzle.

The plug 12 has two peripheral grooves 18 defining between them a flexible vane 19 which is of sufficient diameter to ensure contact with the bore 6 and seal the nozzle. The vane 19 thus acts as a flexible diaphragm or bell-washer seal.

From the valve body taper 5, a small jet outlet 20 is directed downwardly alongside the nozzle. This feature does not itself form part of the present invention.

CLAIMS

1. A tap comprising a body with a tubular spigot, to fit in a liquid container outlet, and a transfer port into a transverse valve chamber tapering to the bore of a dispensing nozzle, a piston valve body axially slidable in the valve chamber and tapering to a plug which is an axially slidable sealed fit in the nozzle bore, the valve being spring-loaded for its body to close the transfer port and its plug to close the nozzle bore, and opening means for lifting the valve against its spring loading.

2. A tap according to claim 1, in which the opening means comprises an axial stem of the valve projecting through a closed end of the valve chamber into engagement with a cam lever which, in lifting the valve, bears against a cap closing the end of the valve chamber.

3. A tap according to claim 1 or 2, in which the plug is sealed in the nozzle by a resiliently flexible peripheral vane integral with the plug, being defined by peripheral grooves in the plug, and the vane is of a sufficiently large diameter for it to contact and flex, like a diaphragm or bell-washer, to seal against the nozzle bore.

4. A tap as described with reference to and as shown by the Drawing.

Printed in the United Kingdom for
Her Majesty's Stationery Office, Dd 8818935, 1987, 4235.
Published at The Patent Office, 25 Southampton Buildings, London, WC2A 1AY, from which copies may be obtained.

07-398 AU 292 EX
PFR26 XR 4,674,296

United States Patent [19]
Renaud

[11] **Patent Number: 4,674,296**
[45] **Date of Patent: Jun. 23, 1987**

[54] **REFRIGERATION BLOCK**

[76] Inventor: **Roger Renaud,** 124 Beland, Gatineau, Quebec, Canada, J8R 1G3

[21] Appl. No.: **845,313**

[22] Filed: **Mar. 28, 1986**

[30] **Foreign Application Priority Data**

Mar. 14, 1986 [CA] Canada 504168

[51] **Int. Cl.**[4] **B67D 5/62**
[52] **U.S. Cl.** **62/389;** 62/393
[58] **Field of Search** 222/146.6; 62/389, 393

[56] **References Cited**

U.S. PATENT DOCUMENTS

1,969,643	8/1934	Fuchs et al.	62/389 X
3,309,886	3/1967	Welty	62/389 X
4,502,294	3/1985	Grant	62/389

Primary Examiner—Lloyd L. King
Attorney, Agent, or Firm—Jones, Tullar & Cooper

[57] **ABSTRACT**

The specification describes a cooling block adapted to be used with dispensers of beverages such as beer. The block is intended to be installed within a bar tower such that a feed line carrying the beverage from a remote container to the dispenser is contacted thereby. The block is cooled by means of a refrigeration line.

7 Claims, 5 Drawing Figures

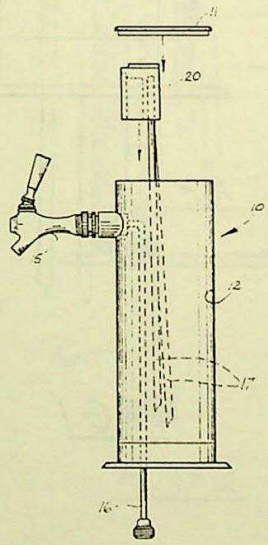

PRIOR ART

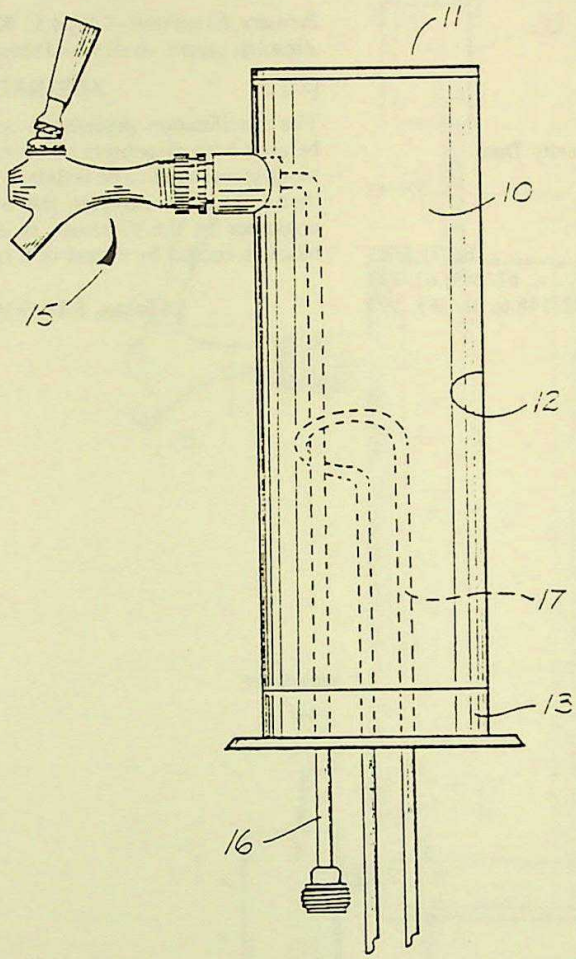

FIG. 1

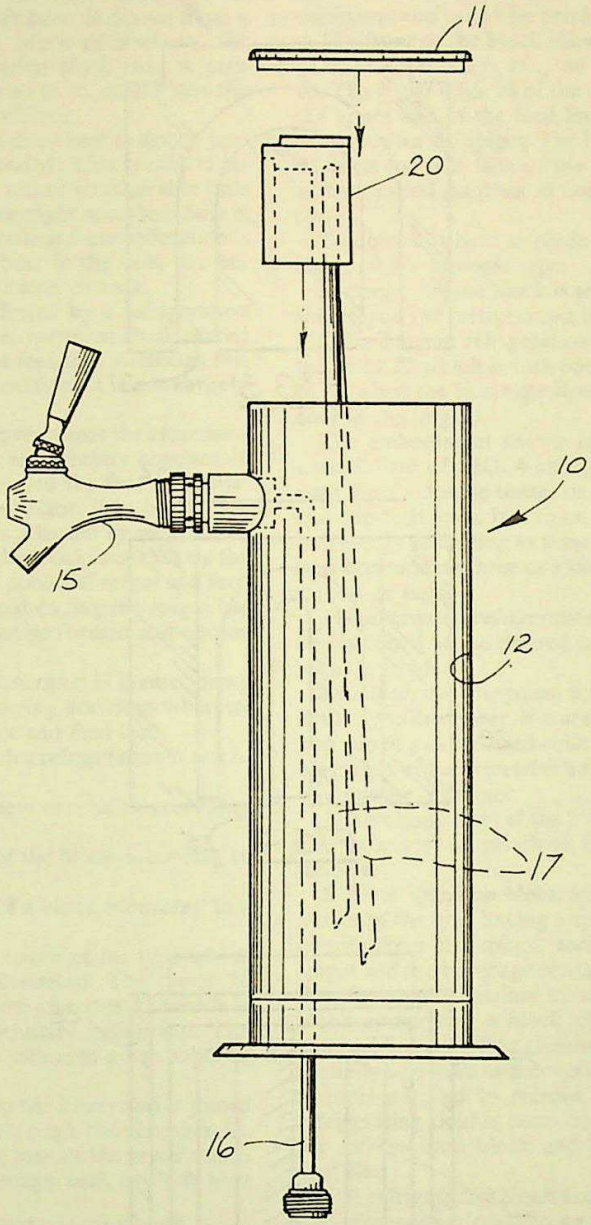

FIG. 2

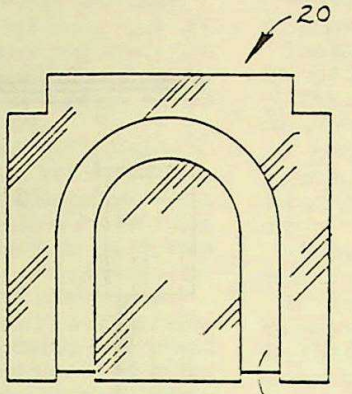

FIG. 3

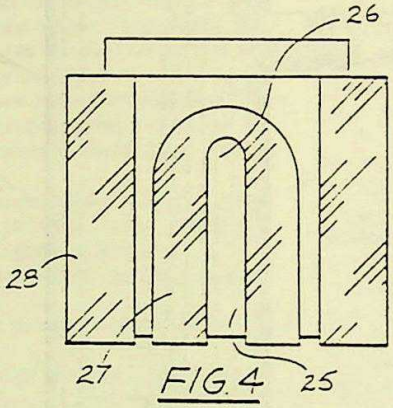

FIG. 4

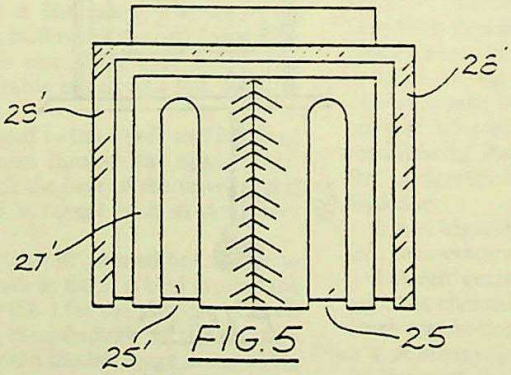

FIG. 5

REFRIGERATION BLOCK

This invention relates to beverage dispensers in which a beverage, such as draft beer, is drawn from a container to a remote spigot. More particularly, the invention relates to a refrigeration block used in conjunction with such a dispenser so as to ensure that the beverage leaving the spigot is chilled.

It is known that when warm draft beer is drawn into a glass, excessive foam is generated. This results in incomplete filling of the glasses, unless considerable time is spent in the process. In active night spots this time is not available. It is further known that foam generation is reduced by cooling the draft beer in the feed line between the spigot and the beer barrel or tank.

Presently, this cooling is effected by a refrigeration line, charged with a suitable refrigeration fluid, placed in proximity or contact with the feed line. Although this method results in improved conditions it is not entirely satisfactory.

Accordingly, this invention overcomes the aforementioned problem by providing a temperature conductive block adapted to partially surround the feed line adjacent to the connection to the spigot. The block also provides a channel or grooves adapted to receive the refrigeration line. In this way the block is cooled by the refrigeration line which in turn cools the spigot and feed lines. Hence, beer or other liquid exiting the spigot has passed through this cooled zone so formed and cooled thereby.

The invention will now be described in greater detail with reference to the accompanying drawings wherein:

FIG. **1** is a tower with spigot and feed line.

FIG. **2** illustrates a tower with a refrigeration block in place.

FIG. **3** illustrates the rear view of a block according to the present invention.

FIG. **4** illustrates the front of the block according to one embodiment, and

FIG. **5** illustrates the front of a block according to a second embodiment.

With reference to FIG. **1**, a tower of the type which might be found in a bar is illustrated. The tower **10** includes a cover **11** and a hollow chamber **12** which in a preferred arrangment is essentially cylindrical. The base **13** is fastened by suitable means to a bar, table or other convenient support.

Spigot or tap **15** is secured to the tower and is joined to feed line **16** which passes through the chamber **12**. The feed line exits through the base of the tower and is connected to a source of beverage such as draft beer (not shown).

In known arrangements, a refrigerated line **17** carrying a refrigeration fluid such as freon is bent around the feed line **16** as shown in FIG. **1** for the purpose of cooling the beverage flowing therethrough. In the arrangement shown in FIG. **1**, when the beverage is not being drawn, the residue in the line above the refrigeration line as well as in the spigot warms up. Thus, when the next quantity of beverage is drawn, the initial amount is warm. When the beverage is draft beer, this results in undesirable foam generation. The problem is overcome by the arrangement shown in FIG. **2**. In this case in accordance with the present invention, a refrigeration block is joined to the feed line directly at the point of entry to the spigot. Additionally, the block is arranged to contact the refrigerated line, thus cooling the spigot and feed line.

As shown in FIG. **3** the rear of the block **20** which is of a temperature conducting material such as aluminum

contains a channel or groove **21**. The refrigeration line fits snugly within this groove so that efficient cooling of the block is effected. Although the channel in FIG. **3** is shown to be U-shaped, it is to be understood that other configurations could be employed.

The front of the block shown in FIG. **4** has a central channel **25** which is adapted to surround the feed line **16**. The upper edge **26** of the channel **25** accommodates the upper end of the feed line just prior to exiting the tower to join the spigot. The U-shaped raised portion **27** contacts the rear face of the spigot attachment means, and the raised portions **28** contact the inner wall of the tower.

The block is held in place by any suitable fastening means as for example tape.

In operation, the block is secured to the feed line and spigot, and the refrigeration line is pressed into channel **21**. The flowing refrigeration fluid results in cooling of the block **20** which in turn cools the feed line and spigot. Now when the beverage is not being drawn it remains cool in the spigot.

The embodiment shown in FIG. **5** is similar to the embodiment of FIG. **4** except that it is intended to be used with a double tower or a tower with two spigots and two feed lines. It is to be understood that refrigeration blocks according to these herein can be constructed to accommodate three or more feed lines and associated spigots or taps.

The aluminum refrigeration block of FIGS. **3–5** may be machined in the desired configuration or cast using suitable molds.

Although the foregoing description has referred particularly to draft beer, it is understood that the refrigeration block can be used with chillable wines or other beverages of the type which are drawn from a container to a remote dispenser.

The embodiments of the invention in which an exclusive property or privilege is claimed are defined as follows:

1. A refrigeration block for use with a beverage dispenser of the type having a spigot, a beverage container remote from the spigot, and a feed line between the spigot and the beverage container to permit beverage to flow from said container to said spigot, the refrigeration block comprising a block of temperature conducting material having a first channel arranged to receive and partially surround said beverage feed line, and a second channel adapted to receive a tube through which a refrigerating fluid is permitted to flow thereby cooling the refrigeration block and hence a beverage in said feed line.

2. A refrigeration block according to claim **1** wherein said temperature conducting material is aluminum.

3. A refrigeration block according to claim **1** wherein said first channel is formed in a first side of said temperature conducting material.

4. A refrigeration block according to claim **1** wherein said second channel is formed in a second side of said temperature conducting material.

5. A refrigeration block according to claim **4** wherein said second channel is U-shaped.

6. A refrigeration block according to claim **1** wherein said first side includes a pair of channels adapted to receive therein a pair of feed lines in a side by side relation.

7. A refrigeration block according to claim **1** wherein said block of temperature conducting material is arranged so as to partially surround said feed line in close proximity to said spigot.

* * * * *

D7-398

PRODUCT KNOWLEDGE

PRODUCT FOCUS #72: CARBONATED BEVERAGE DISPENSERS

JAN. 1988 PAGE 85

FOODSERVICE EQUIPMENT & SUPPLIES SPECIALIST

If patrons get no kick from their soda pop, operators have only their equipment to blame.

Although it is perhaps the best-selling item on the menu, the cook doesn't affect its quality, taste or secret ingredients. He or she has no hand in its preparation.

The quality of soft drinks—their fizziness and flavor—and the speed at which they are delivered, depend on the equipment used to dispense them. Correctly spec'ed and properly maintained carbonated dispensing equipment can keep beverages at the proper temperature and carbonation, and keep patrons from sending flat, syrupy concoctions back to the serving station. And that keeps profit margins a little healthier (and waiters a little happier).

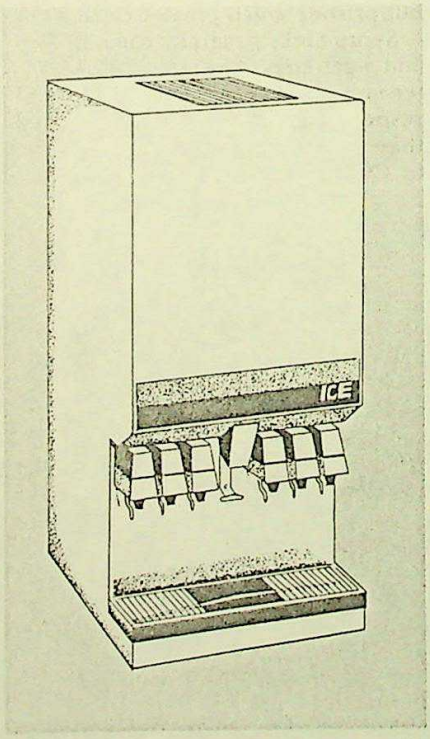

Each additional valve, or faucet, adds about 3″ to the tower's width.

Coca-Cola and Pepsi-Cola continue their decades-long competition, slugging it out in the drip trays for the dominant share of the soft drink market. Those beverages, and the rest of an ever-growing number of brands, are dispensed through a variety of equipment based on two central systems.

Post-mix dispensing systems combine water with beverage syrup at the dispensing head to make a soft drink. Tap water is filtered, carbonated and, like the syrup lines, chilled. Both ingredients are propelled through the lines by carbon dioxide gas from the tank, which also supplies the carbonator. The dispensing head then mixes the two in proper proportions. (High-pressure air propulsion used instead of CO_2 in about 15% of these systems.)

Premix systems dispensers work similarly, except the beverage is already mixed in the correct proportions. Carbon dioxide tanks are still necessary for propelling it to the dispensing valves, but mixing valves aren't necessary.

Both types of carbonated beverage dispensers are available in a variety of self-contained units, ranging from single-valve, single-beverage units to 12-beverage valve models with dual ice chutes. Deluxe, high-volume beverage/ice dispensers function as all-in-one centers. Some hold nearly 150 lbs. of ice, can store up to eight 5-gal. syrup tanks, a carbonator and CO_2 cylinder, and include dispensers for cups, lids and straws.

Combination ice and beverage dispensers have become the industry standard for their convenience as self-serve units. A few years ago, dispensing units were an average of 3′ wide; today, the advent of convenience store beverage service has led to an increasing number and variety of countertop models. Six-valve units, including ice service and 90 lbs. of ice storage, yet measuring only 23″ wide are now available. However, each additional valve, or faucet, adds about 3″ to the tower's width.

Dispensing valves come in two styles for different service needs. Individual, electrically or manually operated push-back arms do well to accommodate self-serve areas; hand-held group valves are fine for bars and other high-traffic areas. These offer push-button selection of up to seven products and operate either hydraulically or with electric solenoid switches.

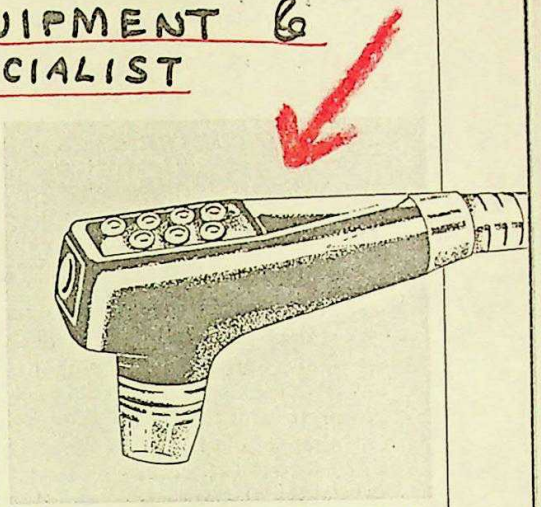

Cobra hoses speed up service in high-volume areas, such as cafeterias.

Operators with almost no room to spare might be interested in pedestal faucets. These space-saving mixing valves take up less than 2″ of counter space and fit into the counter with a 3″-long shank.

Mixing faucet guns, complete with cobra hose, can dispense up to eight drinks. These are particularly useful, not only in bars and taverns for their ability to serve up to six mixed drinks plus soda and water, but also in cafeterias, where facility workers can take care of long lines at a fast pace instead of depending on the speed of patrons serving themselves.

Refrigerated cooling units and cold plates are an integral part of the beverage/ice-dispensing unit in countertop models. These are usually display-type models with up to eight product valves; some dispense two flavors per valve. Refrigerated units usually have a ⅓ or ¼ hp compressor, producing up to 700 drinks an hour.

Cold plates for cooling the product can be just as reliable as mechanical refrigeration devices, but are simpler and sometimes more reliable. Specifiers should keep in mind that they are especially well-suited to low- to mid-volume operations and areas where a

another copy in D7-308

D 7/399 xR

Germany 435451
#435457

435457

Egon Mütterlein in Oberbobritzsch b. Freiberg i. Sa.

Tropfenfänger für Kaffeekannen u. dgl.

Patentiert im Deutschen Reiche vom 23. Oktober 1925 ab.

Um den nach dem Eingießen aus Kannen mit Schnauze an ihnen herablaufenden Tropfen aufzufangen, sind bereits die verschiedensten Tropfenfänger im Gebrauch, doch sind die einen unästhetisch, die anderen wieder nicht für jede Ausgußform passend und auch nicht ohne besondere Hilfsmittel anzubringen.

Der in der Zeichnung dargestellte Tropfenfänger besteht aus einem Metallstreifen, der sich federnd im Ausguß festklemmt; sein Mittelteil, das nötigenfalls leicht mittels der Hand nachgebogen werden kann, läuft parallel zur Flüssigkeitslaufbahn im Innern des Ausgusses und ist beispielsweise hier mit durch Einprägungen erzeugten Auflagepunkten versehen, um im Gebrauch eine Kapillarwirkung zwischen dem Streifen und der Ausgußwand zu ermöglichen, und legt sich in etwas schräg nach unten zeigender Richtung über die untere Kante des Ausgußrandes, zu dem der erforderliche Abstand durch eine eingepreßte Nut im Streifen erreicht wird.

Da der Tropfenfänger als glatter Streifen ausgebildet ist, kann derselbe mit der Hand leicht für die vorhandene Ausgußform nachgebogen werden.

Die Wirkungsweise besteht darin, daß der sonst am Ausgußäußern herablaufende Tropfen durch Kapillarwirkung zwischen dem Streifen und der Ausgußwand wieder in das Innere der Kanne gelangt.

PATENT-ANSPRUCH:

Tropfenfänger für Kaffeekannen u. dgl., bestehend aus einem Metallstreifen, der ein Stück mit der unteren inneren Ausgußwand parallel läuft und sich unter Einpressung einer Nut etwas schräg nach unten zeigend über den Ausgußrand legt, während sein anderes Ende als Feder ausgebildet ist, um ihn in der Ausgußform festzuhalten, dadurch gekennzeichnet, daß das parallel zum Ausgußinnern laufende Stück mit durch Einprägungen erzeugten Auflagepunkten versehen ist, während das über dem Rand liegende Ende nutenartig gepreßt ist.

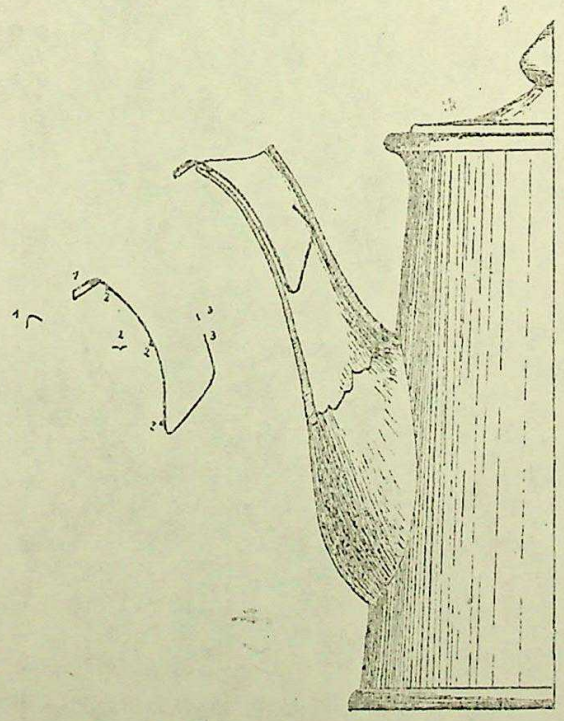

from 222/571

BERLIN. GEDRUCKT IN DER REICHSDRUCKEREI.

DEUTSCHES REIC I Nr. 49

AUSGEGEBEN AM
15. OKTOBER 1926

REICHSPATENTAMT

PATENTSCHRIFT

— № 435457 —

KLASSE 64a GRUPPE 5

(M 91759 III/64a)

Egon Mütterlein in Oberbobritzsch b. Freiberg i. Sa.

Tropfenfänger für Kaffeekannen u. dgl.

222-571 SWISS 219,093

D7/399 XR

SWITZERLAND

Franz Nigg

Patent Nr. 219093
1 Blatt

219093

Fig. 1

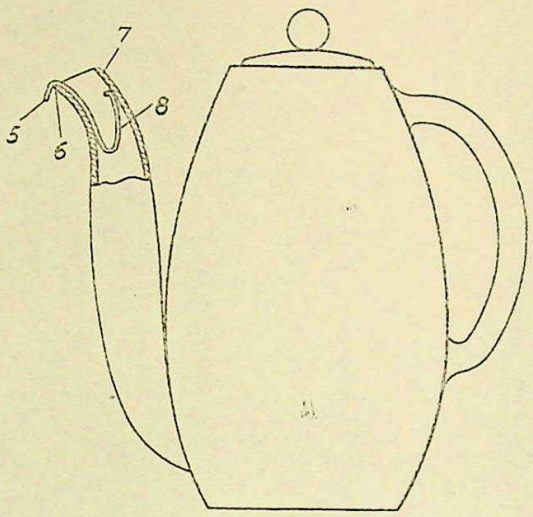

Fig. 2

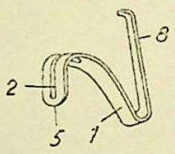

Fig. 3

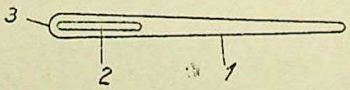

from 222/571 XR

222-571

Nr. 219093 Klasse 15 f

Div. 9

SCHWEIZERISCHE EIDGENOSSENSCHAFT

EIDG. AMT FÜR GEISTIGES EIGENTUM

PATENTSCHRIFT

Veröffentlicht am 1. Mai 1942

Gesuch eingereicht: 4. März 1941, 20 Uhr. — Patent eingetragen: 31. Januar 1942.

HAUPTPATENT

Franz NIGG, Zürich (Schweiz).

Tropfenfänger.

Gegenstand vorliegender Erfindung ist ein in den Auslauf eines Gefäßes, zum Beispiel einer Kanne, einzusetzender Tropfenfänger.

In der Zeichnung ist ein Ausführungsbeispiel des Erfindungsgegenstandes dargestellt.

Fig. 1 zeigt eine Kanne zum Teil im Schnitt mit dem Tropfenfänger in der Gebrauchslage;

Fig. 2 ist ein Schaubild des Tropfenfängers;

Fig. 3 zeigt ein zur Herstellung des Tropfenfängers bestimmtes Materialstück.

Der gezeichnete Tropfenfänger besteht aus einem Bügel, zum Beispiel einem Streifen 1 aus rostfreiem Material, wie Chromnickelstahl, aus Kunststoff usw. Im Streifen 1 ist eine in Längsrichtung verlaufende Öffnung 2, welche bis nahe an das eine Ende 3 des Streifens 1 geführt ist. Der Streifen (Fig. 3) wird Z-förmig abgebogen, so daß eine Zunge 5 entsteht, die über die Auslaufkante 6 des Kannenauslaufes 7 zu liegen kommt. Der Schlitz 2 verläuft zum Teil in dieser die Auslaufkante überragenden Zunge, zum Teil kommt er in den Auslauf zu liegen. Das Endstück 8 des Streifens 1 ist abgebogen und bildet eine Feder. Diese sichert dem Tropfenfänger seinen Halt im Auslauf 7 während des Entleerens von Flüssigkeit.

Beim Entleeren wird ein an der Zunge 5 hängender Tropfen durch den Schlitz 2 festgehalten und durch den letzteren in den Kannenauslauf zurückgesogen. Zum Reinigen der Kanne und des Tropfenfängers kann letzterer leicht dem Auslauf 7 entnommen werden.

Der Tropfenfänger könnte auch aus Draht gebildet werden, wobei die in Längsrichtung verlaufende Öffnung des Bügels durch zwei im Abstand voreinander verlaufende Drahtteile gebildet wird.

PATENTANSPRUCH:

Tropfenfänger zum Einsetzen in einen Gefäßauslauf, gekennzeichnet durch einen Z-förmig gebogenen, federnden, nicht rosten-

den Bügel mit einer zum Aufsetzen auf die Auslaufkante des Gefäßes dienenden Zunge, in welcher eine in der Längsrichtung des Bügels verlaufende Öffnung vorgesehen ist.

UNTERANSPRÜCHE:

1. Tropfenfänger nach Patentanspruch, dadurch gekennzeichnet, daß der Bügel aus einem Streifen gebildet ist, dessen Zunge einen Längsschlitz aufweist.

2. Tropfenfänger nach Patentanspruch, dadurch gekennzeichnet, daß der Bügel aus Draht gebildet ist.

3. Tropfenfänger nach Patentanspruch und Unteranspruch 1, wie in der Zeichnung dargestellt.

Franz NIGG.

Vertreter: Fritz ISLER, Zürich.

~~222/571~~

D 7/399 xR

SWITZERLAND

#252987

Günter Baum

Patent Nr. 252987

1 Blatt

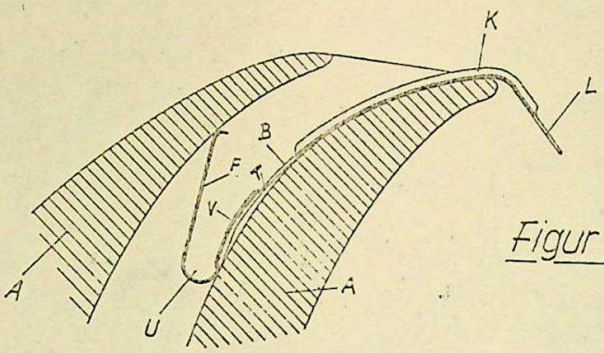

Figur 1

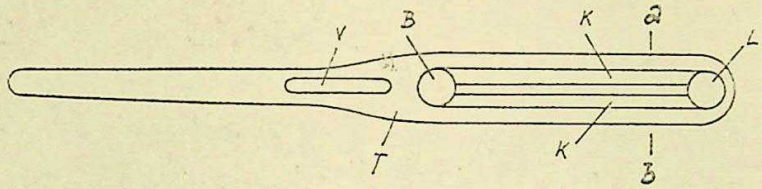

Figur 2

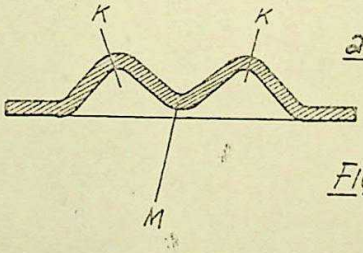

a-b

Figur 3

from 222/571

Nr. 252987

SCHWEIZERISCHE EIDGENOSSENSCHAFT

EIDGENÖSSISCHES AMT FÜR GEISTIGES EIGENTUM

PATENTSCHRIFT

Veröffentlicht am 16. Oktober 1948

Klasse 15 f

Nr. 252987
EXAMINER'S COPY
DIV.

Gesuch eingereicht: 7. September 1946, 16 Uhr. — Patent eingetragen: 15. Februar 1948.

HAUPTPATENT

Günter Baum, Zürich (Schweiz).

Tropfenfänger.

Gegenstand vorliegender Erfindung ist ein Tropfenfänger.

Wenn eine Flüssigkeit über einen Rand fließt, welcher nicht genügend scharfkantig ist, so wird die Flüssigkeit diesen Rand netzen und damit die Vorbedingung schaffen, daß bei der Unterbrechung des Gießens resp. des Fließens der Flüssigkeit der letzte Rest des mit immer geringer werdender Intensität fließenden Strahles an der Außenwandung des Ausgusses herunterfließt und damit die Unterlage, auf welche man das Gefäß abstellt, netzt oder gar beschmutzt.

Um diesem Übelstand abzuhelfen, hat man speziell für den Hausgebrauch Tropfenfänger vorgeschlagen, die entweder durch einen Filz-, Schwamm- oder Wattebausch den letzten Flüssigkeitsrest aufgesogen haben oder solche, bei denen man den Strahl vermittels Haftspannungen zu leiten versuchte, dergestalt, daß der so geleitete Strahl über eine scharfe Kante fließen mußte, an welcher er dann abbrechen sollte. Der so unterbrochene Strahl ermöglicht es praktisch aber nicht, das Herabfließen der letzten Schlußtropfen zu unterbinden, so daß immer noch ein Beschmutzen der Gefäßunterlage stattfindet.

Durch den erfindungsgemäßen Tropfenfänger wird auch der Schlußtropfen von der Gefäßwandung ferngehalten, so daß diese also sauber bleibt und auch ein Beschmutzen der Gefäßunterlage ausgeschlossen ist.

Ein Ausführungsbeispiel des Erfindungsgegenstandes ist in den nachfolgend angeführten Fig. 1, 2 und 3 dargestellt worden. Es zeigt:

Fig. 1 einen Aufriß des im Ausguß befindlichen Tropfenfängers, teilweise im Schnitt,

Fig. 2 einen abgewickelten Grundriß des Tropfenfängers und

Fig. 3 einen Querschnitt *a—b* des Tropfenfängers.

A ist der Ausguß eines Gefäßes, bei welchem eine Flüssigkeit von relativ geringer Viskosität durch einen sich langsam verjüngenden Ausguß fließt, im Schnitt. *T* ist der Grundkörper des Tropfenfängers. *K* sind zwei oben geschlossene, auch als Verstärkungsrippen dienende Kapillarinnen, die an beiden Enden durch die Löcher *L* und *B* begrenzt werden. Durch das Loch *B* kann die in die Kapillarrinnen *K* zurückgesogene Flüssigkeit leicht abströmen, während das Loch *L* zum Aufspannen des Schlußtropfens dient. *V* ist eine Verstärkungsrippe, welche bewirkt, daß der Tropfenfänger sich beim Aufbiegen der Feder *F* vor der Biegung *U* nicht in seiner Axialrichtung verformen kann. Zur Unterstützung der Kapillarwirkung soll die Mittelwelle *M* zwischen den beiden Kapillarrinnen *K* im Profil nicht so tief gehen wie die Außenränder des Tropfenfängerprofils.

Der beim Unterbruch des Gießens entstehende Strahlrest wird durch Kapillar-

kräfte in den Ausguß *A* zurückgesogen. Dies würde aber noch nicht genügen, denn die Kapillarkräfte werden unterbrochen, wenn der Strahl nicht mehr kontinuierlich ist. Dieses Abreißen des Rückflusses in den Kapillaren *K* wird verursacht durch die Haftspannungen der Flüssigkeit an der Oberfläche des Tropfenfängers selbst. Würde man also nur die Kapillarkräfte auf den durch das Aufhören des Gießens unterbrochenen Strahl wirken lassen, so käme noch ein Schlußtropfen zustande, der von den Kapillarkräften nicht mehr abgesogen und damit schließlich am Ausguß herunterrinnen würde. Um diesen Schlußtropfen noch zu binden, ist am vordern Ende des Tropfenfängers das Loch *L* vorhanden, durch dessen Rand der Schlußtropfen infolge der Randspannungen, denen jede Flüssigkeit infolge ihrer Viskosität unterworfen ist, in Form eines Flüssigkeitsfilms aufgespannt wird. Die Bestimmung der Größe der Kapillarrinnen beziehungsweise des zuletzt besprochenen Loches richtet sich nach der Viskosität der betreffenden Flüssigkeit.

PATENTANSPRUCH:

Tropfenfänger, gekennzeichnet durch eine als Verstärkungsrippe dienende, oben geschlossene Kapillarrinne, die hinten in einem Loch endet, durch welches der durch die Kapillarrinne zurückgesaugte Strahlrest abfließen kann, und durch ein Loch am vordern Ende, um den Schlußtropfen am Lochrand aufzuspannen und nicht am Ausguß herunterlaufen zu lassen.

Günter Baum.

D7/399 XR

Zu der Patentschrift 826 833
Kl. 64 a Gr. 5

GERMANY

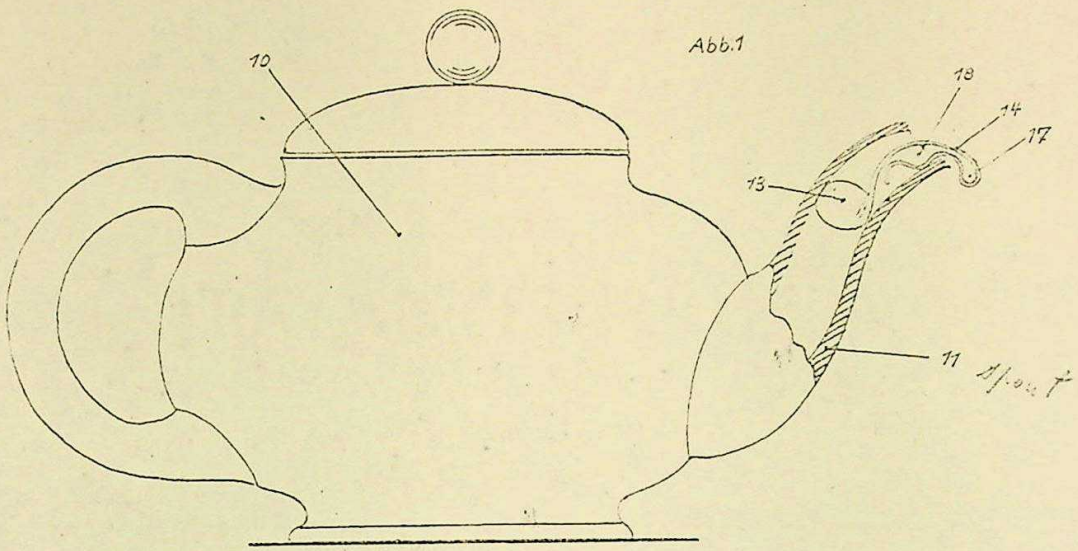

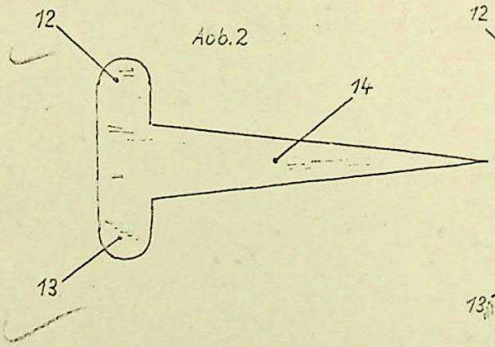

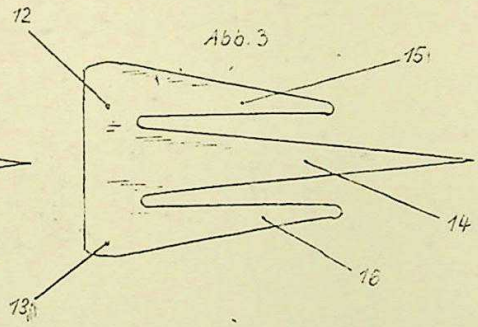

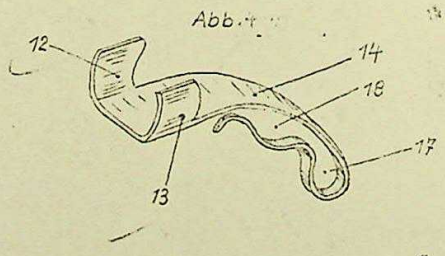

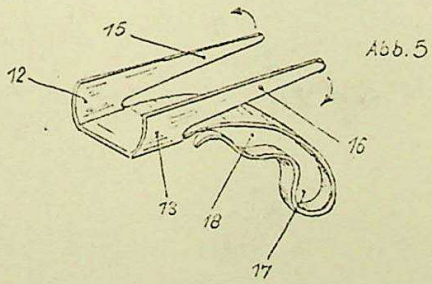

from 222/571

Erteilt auf Grund des Ersten Überleitungsgesetzes vom 8. Juli 1949
(WiGBl. S. 175)

BUNDESREPUBLIK DEUTSCHLAND

AUSGEGEBEN AM
7. JANUAR 1952

DEUTSCHES PATENTAMT

PATENTSCHRIFT

№ 826 833

KLASSE 64a GRUPPE 5

G 93 III/64a

Erwin Gude, Westerkappeln (Westf.)
ist als Erfinder genannt worden

Erwin Gude, Westerkappeln (Westf.)

An dem Ausgußrand einer Kanne anzuordnender Tropfensauger

Patentiert im Gebiet der Bundesrepublik Deutschland vom 15. Oktober 1949 an
Patenterteilung bekanntgemacht am 29. November 1951

Die Erfindung bezieht sich auf einen an dem Ausgußrand einer Kanne anzuordnenden Tropfensauger, der eine Tropfenbildung am Rande des Ausgusses verhindert, indem er dieselben aufnimmt und automatisch in die Kanne zurückgleiten läßt. Das Wesen der Erfindung wird darin erblickt, die sich nach Beendigung einer Schüttbewegung in bekannter Weise meist am Rande des Ausgusses bildenden Tropfen durch einen klauenförmigen, doppelschlaufigen, über den Rand des Ausgusses hinausragenden Körper von dem Ausgußrand fernzuhalten und dieselben in den zusammenhängenden, ösenartigen Kammern dieses Körpers aufzunehmen. Beim Rücklauf der Flüssigkeit aus dem Ausguß in die Kanne tritt zwangsläufig eine geringe Sogwirkung auf, die das Abfallen der in der hinteren Kammer sitzenden Tropfen unterstützt, die dann wiederum, auf Grund der bekannten Kohäsionswirkung, die in der vorderen nach außen ragenden Kammer sitzenden Tropfen nach sich ziehen. Der erfindungsgemäße Körper kann aus einem biegsamen Material, wie Blech o. dgl., bestehen und muß mit dem Ausgußrand in lösbare Verbindung gebracht werden können. Derselbe kann z. B. mittels zweier federnder Schenkel klemmend in dem Ausguß gehalten werden. Der doppelschlaufige Körper wird zweckmäßig durch entsprechendes Biegen eines spitz zulaufenden Blechstreifens gebildet. Es liegt natürlich im Bereiche der fachmännischen Fertigkeit, die lösbare Verbindung des erfindungsgemäßen Körpers mit dem Ausguß auch in anderer Form vorzunehmen, wie es auch unter den vorliegenden Erfindungsgedanken fällt, die Form der beiden Tropfenkammern den praktischen Erfordernissen möglichst anzupassen.

In der Zeichnung ist der Erfindungsgegenstand in zwei Ausführungsmöglichkeiten beispielsweise dargestellt, und zwar zeigt

Abb. 1 eine Kanne mit einem Ausguß, teilweise im Schnitt, in welchen ein Tropfensauger eingesetzt ist,

Abb. 2 und 3 je einen aus Blech gestanzten, noch nicht gebogenen Tropfensaugkörper und

Abb. 4 und 5 die beiden Körper gemäß Abb. 2 und 3 zum Einsetzen in den Kannenausguß entsprechend gebogen.

Gemäß der Zeichnung ist 10 eine Kanne mit dem Ausguß 11. Der erfindungsgemäße Tropfensauger besteht aus den federnden Klemmschenkeln 12, 13 und dem spitz zulaufenden Streifen 14, der zur Bildung der Tropfenkammern 17 und 18 klauenförmig umgebogen und mit Wellen versehen wird. Gemäß Abb. 3 und 5 sind 15 und 16 zwei anders geformte Schenkel eines Tropfensaugkörpers, die auch gemäß den dargestellten Pfeilen außen über den Rand des Ausgusses gebogen werden können.

Patentansprüche:

1. An dem Ausgußrand einer Kanne anzuordnender Tropfensauger, dadurch gekennzeichnet, daß er aus einem klauenförmigen, doppelschlaufigen, über den Rand des Ausgusses hinausragenden Flachkörper (14) mit zwei durch Umbiegen des entsprechend gewellten Flachkörpers gebildeten zusammenhängenden ösenartigen Kammern besteht.

2. Tropfensauger nach Anspruch 1, dadurch gekennzeichnet, daß er aus einem entsprechend gebogenen, spitz zulaufenden Blechstreifen (14) mit federnden Klemmschenkeln (12, 13) besteht, welch letztere dem Tropfensauger im Ausguß den notwendigen Halt verleihen.

3. Tropfensauger nach Anspruch 1, dadurch gekennzeichnet, daß seine Schenkel (15, 16) zu seinem Halt über den Rand des Ausgusses hakenförmig gebogen sind.

Angezogene Druckschriften:
Deutsche Patentschriften Nr. 435 457, 692 620.

Hierzu 1 Blatt Zeichnungen

D7/399

Best Products 1980 p.291

D7/399

**REBATE OFFERS
If any of the products in our catalog are selected by the manufacturer for a rebate offer that rebate will apply against our already low price

7

8

9

Norelco

WARING

Air tight for refrigerator storage

10

MR. COFFEE

11

12

13

14

15

16

WEST BEND

17

Sunbeam

18

19

20

21

22

FARBERWARE

23

24

Regal

Regal

25

BEST

D 7/399

...e the product be- | ...ness, Miller at West Bend is skep- | ...in its new catalog. Some depart- ment stores have started telling a | ...ket," said Homa. "Roughl... of that is due to demographic

Announcing a REVOLUTION in COFFEE BREWING!

The exclusive Ever Fresh Coffee System Pot and Insert (Pat. Pend.) turns the everyday coffeemaker into an all-day flavor saver!

This is a revolutionary process that is sure to change coffee brewing forever! Provides top profit margins at retail!

See it for yourself at the NHMA and register for a FREE TRIP FOR TWO TO THE BAHAMAS! BOOTHS 4390 & 4391 IN CHICAGO.

OCT. 1, 1984

The Ever Fresh Coffee System is an American-made product featuring heat-resistant Pyrex® brand glass.

Brought to you by **Wood Manufacturing Company, Inc.** builders of the famous Ranger Boats.

Ever Fresh® COFFEE SYSTEMS

HFD

PAGE 52

Wood Manufacturing Company, Inc.
P.O. Box 262—Highway 178 North
Flippin, AR 72634